G80YCR-P10WCD0-000L

amc, type_g8

General information

Part number	G80YCR-P10WCD0-000L
Termination	solder
Size	0
Locking principle	break , push
Coding	c_key_amc
Cable Diameter	cable_amc_0

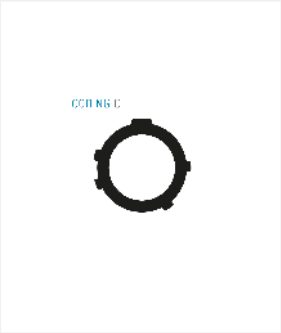

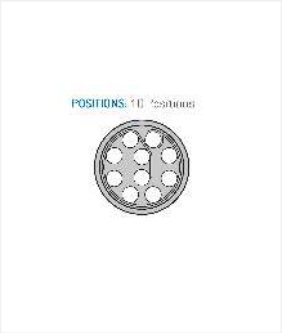

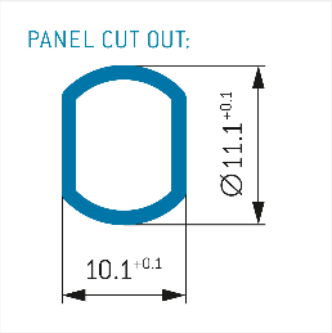

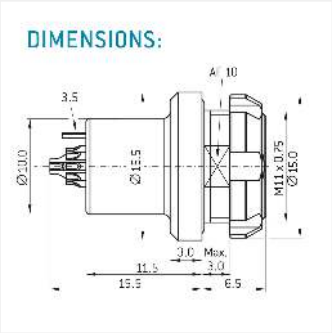

Contact insert description

Number of contacts	10
Contact type	sockets
Contact diameter	05mm
Insulator material	peek
Wire cross section	26_awg
Termination	solder
Termination diameter	065mm

reverse_gender_on_request

Technical information

Nominal current single contact	05_a	iec_60512_5_2
Nominal current insert	2,75 A	vde_0298_4
Test voltage	06_kv_ac	eia_364_20f

safety_text

Mechanical and environmental data

Degree of protection*	ipsk8_ip6k9k
Operating temperature	51_125_c
Mating cycles	5000

mated

Material and surface treatments

Housing	ruthenium
Contact	cu_alloy_gold

safety_text_2
ul_text
illustrative_text