© – TE Connectivity. All Rights Reserved.

REVISIONS					
P	LTR	DESCRIPTION	DATE	DWN	APVD
	C	REVISED PER ECO-20-001912	04JUN2020	SB	JO

1. 0.00076[.000030] GOLD IN THE CONTACT AREA, 0.00254[.000100] MATTE TIN-LEAD ON REMAINDER OF CONTACT, ALL OVER .00127[.000050] NICKEL.
2. POINT OF MEASUREMENT FOR PLATING THICKNESS.
3. THE NOTED DIMENSIONS APPLY AT THE INTERSECTION OF THE POST AND THE HOUSING.
4. ON ASSEMBLIES WITH FOUR OR MORE POSITIONS, TWO POLARIZATION SLOTS. ON ASSEMBLIES WITH TWO OR THREE POSITIONS, ONE POLARIZATION SLOT.
5. 0.25 [.010] RECESS PERMISSIBLE IN THIS AREA FOR MOLD SHUT OFF

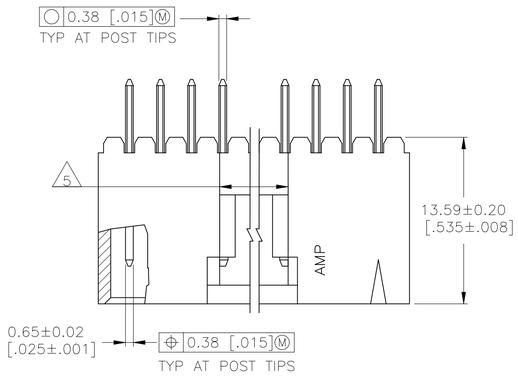

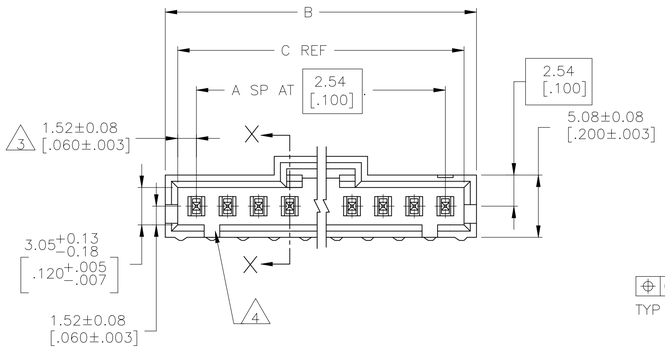

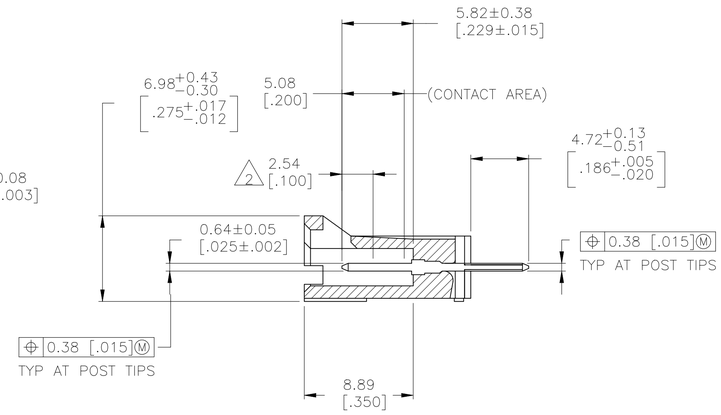

SECTION X–X

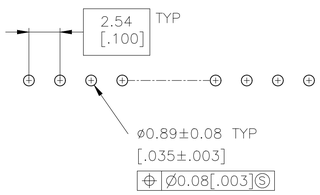

RECOMMENDED HOLE LAYOUT

1	18.28 [.720]	20.19 [.795]	6	7	1825533-2
1	36.07 [1.420]	37.97 [1.495]	13	14	1825533-1
PLATING	C	B	A	NO. OF POSN	PART NO.

THIS DRAWING IS A CONTROLLED DOCUMENT.

DIMENSIONS: mm [INCHES]

TOLERANCES UNLESS OTHERWISE SPECIFIED:
0 PLC ± –
1 PLC ± –
2 PLC ± 0.13[.005]
3 PLC ± –
4 PLC ± –
ANGLES ± –

MATERIAL: HOUSING FLAME RETARDANT NYLON COLOUR-BLACK CONTACTS: BRASS

FINISH: SEE TABLE

DWN R BROWN 23JAN2006
CHK J GESFORD 23JAN2006
APVD J GESFORD 23JAN2006
PRODUCT SPEC —
APPLICATION SPEC —
WEIGHT —

TE Connectivity

NAME: HDR ASSY,VERT,SINGLE ROW 2.54[.100]C,0.64[.025]SQ POST, WITH PLZN&LATCHING, AMPMODU MTE

SIZE A1 | CAGE CODE 00779 | DRAWING NO C-1825533 | RESTRICTED TO —

CUSTOMER DRAWING | SCALE 4:1 | SHEET 1 OF 1 | REV C

4805 (1/15)