PART NO.	ENG. NO.
NOT TOOLED	42464-(P901)L
02-09-1651	42464-(P901)
NOT TOOLED	42464-(P550)L
NOT TOOLED	42464-(P550)
NOT TOOLED	42464-(P558)L
NOT TOOLED	42464-(P558)

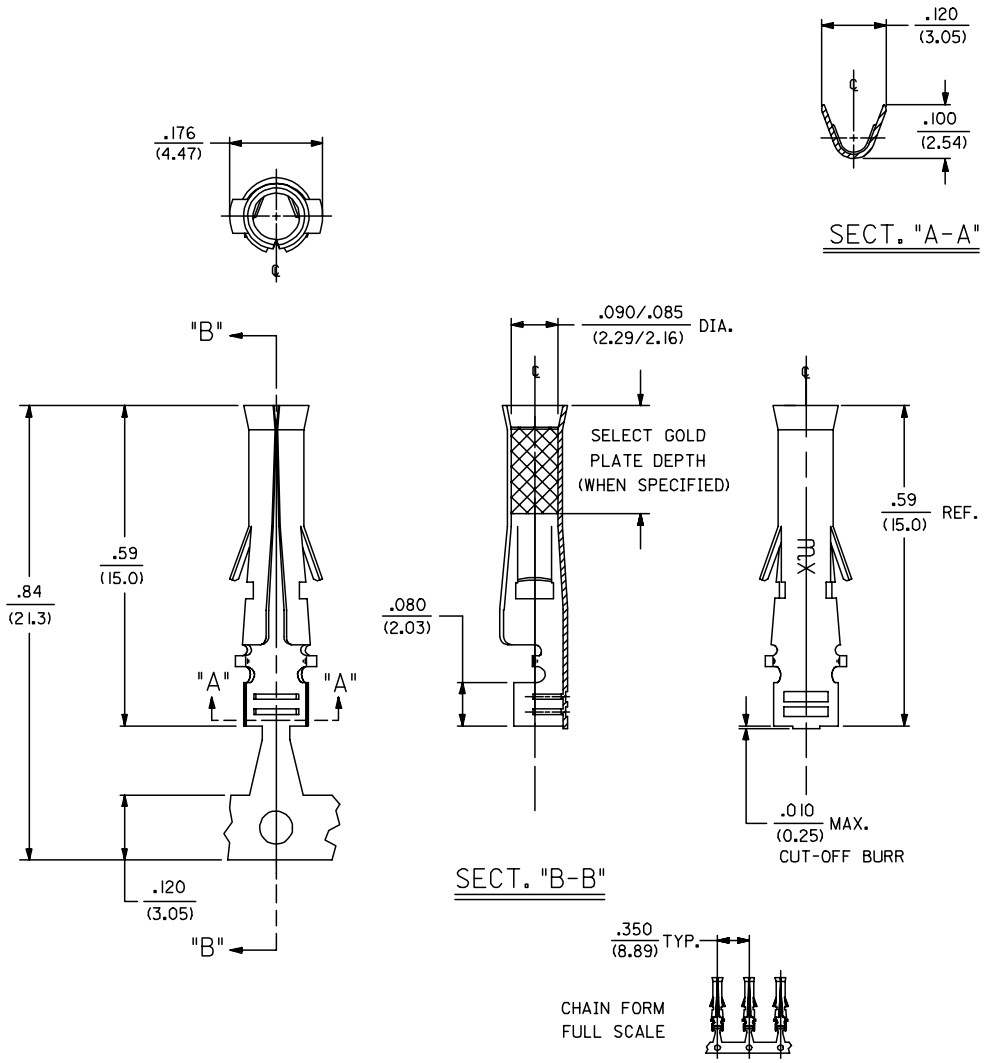

LEGEND

42464- (****)*

- FORM: BLANK=CHAIN, L=LOOSE
- FINISH CODE
- P=PREPLATE, BLANK=POSTPLATE

NOTES:

1. MATERIAL: CARTRIDGE BRASS, ALLOY #C26000 .008/(0.20) THICK.
2. FINISH CODES:
   - 901 HOT TIN DIP .000020/(0.00051) MIN.
   - 550 SELECT GOLD PLATE .000015/(0.00038) MIN. IN CONTACT AREA, OVER .000030/(0.00076) MIN. NICKEL OVERALL WITH .000010/(0.00025) MAX. GOLD FLASH OVERALL.
   - 558 SELECT GOLD PLATE .000030/(0.00076) MIN. IN CONTACT AREA, OVER .000050/(0.00127) MIN. NICKEL OVERALL WITH .000010/(0.00025) MAX. GOLD FLASH OVERALL.
3. PRODUCT SPECIFICATION: NONE
4. TERMINAL FOR USE WITH .093/(2.36) SERIES HOUSINGS AND WILL ACCEPT 16 THRU 20 AWG WIRE.
5. PULL OUT FORCE: 20 LBS. MIN. RETENTION IN HOUSING.

UPDATE NOTES
EC NO: UCP2006-2415 2006/05/16
DRWN:PRIDDER 2006/05/22
CHKD:AELHAG 2006/05/22
APPR:FSMITH 2006/05/22
DESCRIPTION
REV
A1

QUALITY SYMBOLS: ▼=0, (C)=0

GENERAL TOLERANCES (UNLESS SPECIFIED)

	mm	INCH
4 PLACES	± ---	± ---
3 PLACES	± ---	± .010
2 PLACES	± 0.25	± .014
1 PLACE	± 0.35	± ---
ANGULAR ±1/2°		

DRAFT WHERE APPLICABLE MUST REMAIN WITHIN DIMENSIONS

DIMENSION STYLE: IN/MM
SCALE: 6:1
DESIGN UNITS: INCH
THIRD ANGLE PROJECTION

		DATE
DRAWN BY	GEP	02/09/89
CHECKED BY	RW	02/09/89
APPROVED BY	RAS	02/09/89

TITLE: .093/(2.36) DIA. SOCKET W/O INSULATION CRIMP FOR 16 THRU 20 AWG. WIRE

molex MOLEX INCORPORATED

MATERIAL NO.: SEE CHART
DOCUMENT NO.: SD-42464-*
SHEET NO.: 1 OF 1
SIZE: C

THIS DRAWING CONTAINS INFORMATION THAT IS PROPRIETARY TO MOLEX INCORPORATED AND SHOULD NOT BE USED WITHOUT WRITTEN PERMISSION

tb_frame_C_P_ME_T
Rev. D 2004/04/02