STRIPPING DIMENSIONS

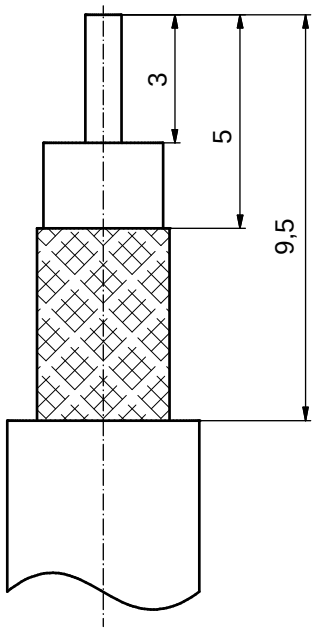

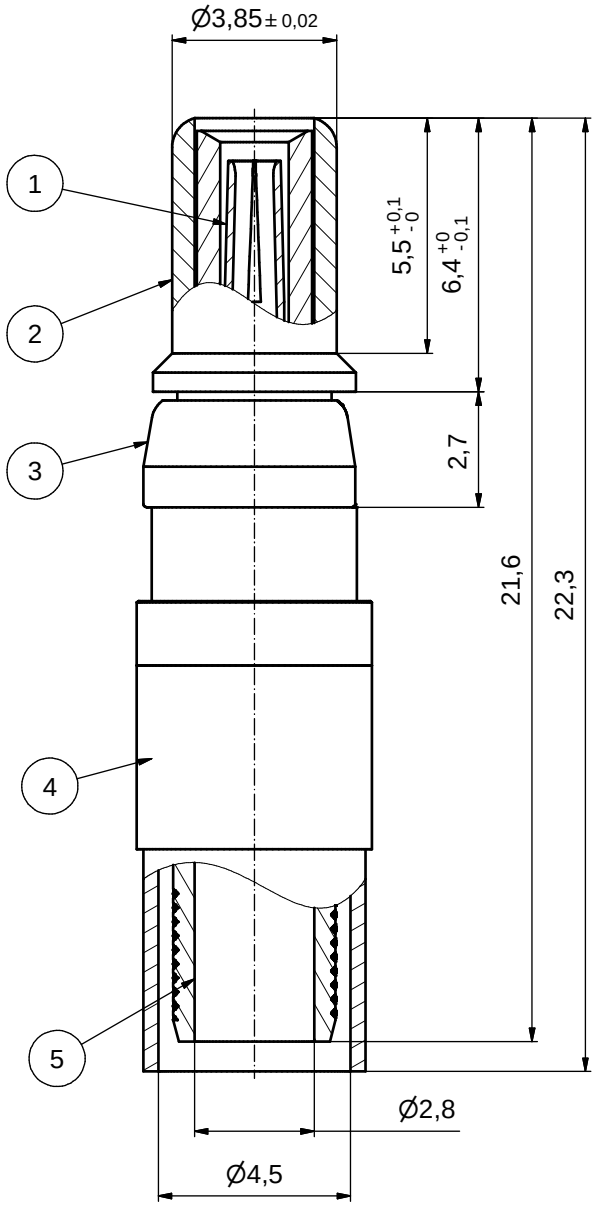

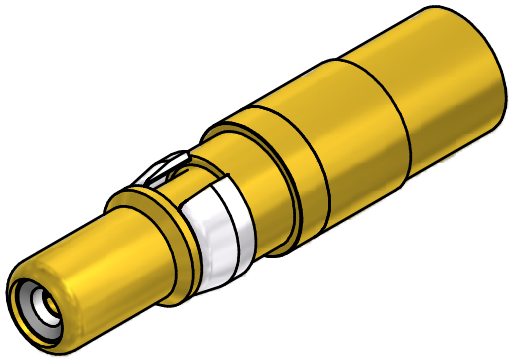

ASSEMBLY TOOLING:
1. CENTER CONTACT: SOLDERED
2. OUTER CONTACT: 360X10519X
   USER CRIMP TOOL: 360X11019X
   INSERT CAVITY A: HEX 4,52 / .178

Part no.	Finish Pos.1	Finish Pos.2	Finish Pos.3	Finish Pos. 4/5
131J20039X	min. 50µin HARD GOLD over min. 50µin NICKEL	min. 30µin HARD GOLD over min. 50µin NICKEL	NICKEL PLATED	GOLD FLASH over NICKEL
131A20039X	GOLD FLASH over NICKEL	GOLD FLASH over NICKEL	NICKEL PLATED	GOLD FLASH over NICKEL

Directive 2002/95/EC „RoHS" Compliant

APPROVAL # FREIGABE # DEBLOCAGE # AUTORIZACION # APPROVAL
CUSTOMER APPROVAL DATE:
NAME: TITLE:
COMPANY NAME:
APPROVAL # FREIGABE # DEBLOCAGE # AUTORIZACION # APPROVAL

THIS DRAWING MAY NOT BE COPIED OR REPRODUCED IN ANY WAY, AND MAY NOT BE PASSED ON TO A THIRD PARTY WITHOUT WRITTEN PERMISSION. OWNERSHIP AND COPYRIGHT OF CONEC GmbH

DO NOT ALTER CAD DRAWING BY HAND

rev.	description	date	name
a	Origin		

tolerance
dim. in mm

	date	name
drawn	05.10.10	Henneboel
appd.	05.10.10	Koch
norm		
d-old		

CONEC®

scale: 8:1
material: see table
title:
COAXIAL CONTACT PLUG 50 OHM
inner + outer conductor for crimp termination
for cable 180 B/U
dwg no: 13K2A026A
Inventor 10
DIN-A3
sh: 1
part no: see table