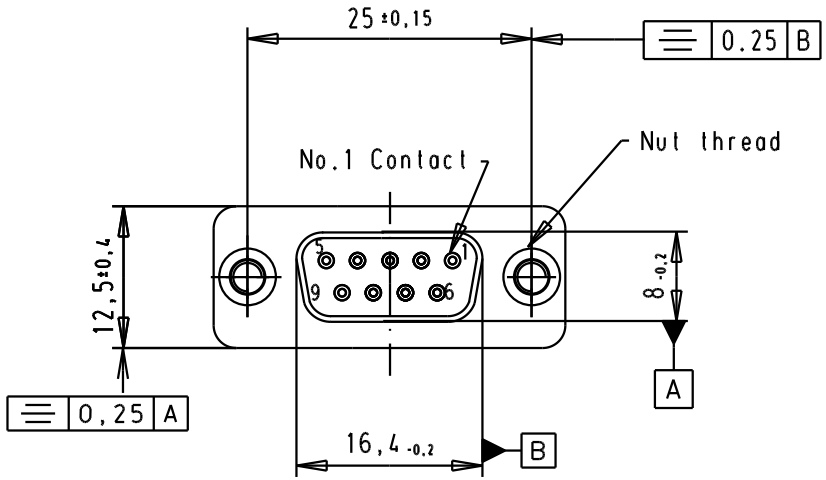

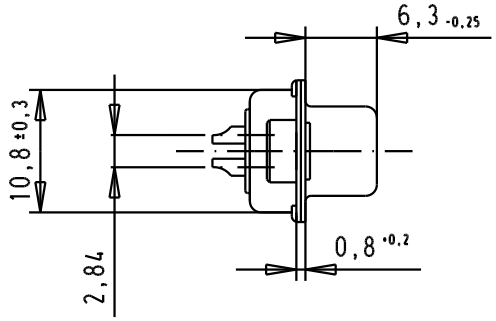

Solder bucket for AWG 20 Max

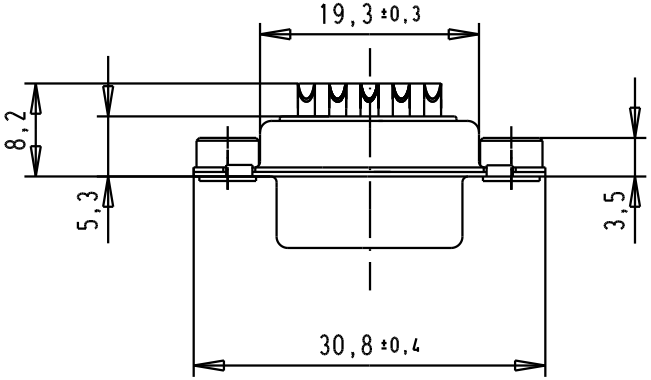

SPECIFICATION

Mating Cycles	500
Filter type	C
Capacitance	47pf ±20%
Working Voltage	100v
Current Rating	7,5A
Insulation Resistance	>1GΩ

FREQUENCY (MHz)	ATTENUATION dB
5	-
10	-
50	-
100	-
500	30dB
1000	35dB

			33440	16/03/06	JMDR
09641117218	M3		32803	29/09/05	JMDR
09641117217	UNC 4-40		31058	8-JUL-02	CV
Part number	Nut thread		Mod.	Dat.	Name

	Dat.	Name
Detail.	8-JUL-02	CV
Insp.		
Stand.		

All Dim. in mm
Orig. Size DIN A 4

HARTING EURL
F-95972 Paris

D-Sub, Female, Straight
9 Poles, solder buckets,
shell with clinch nuts

Ma?Mstab/ Scale: 1.5:1

TB 0964111721x

Sub.

Blatt/ Page: 1/1