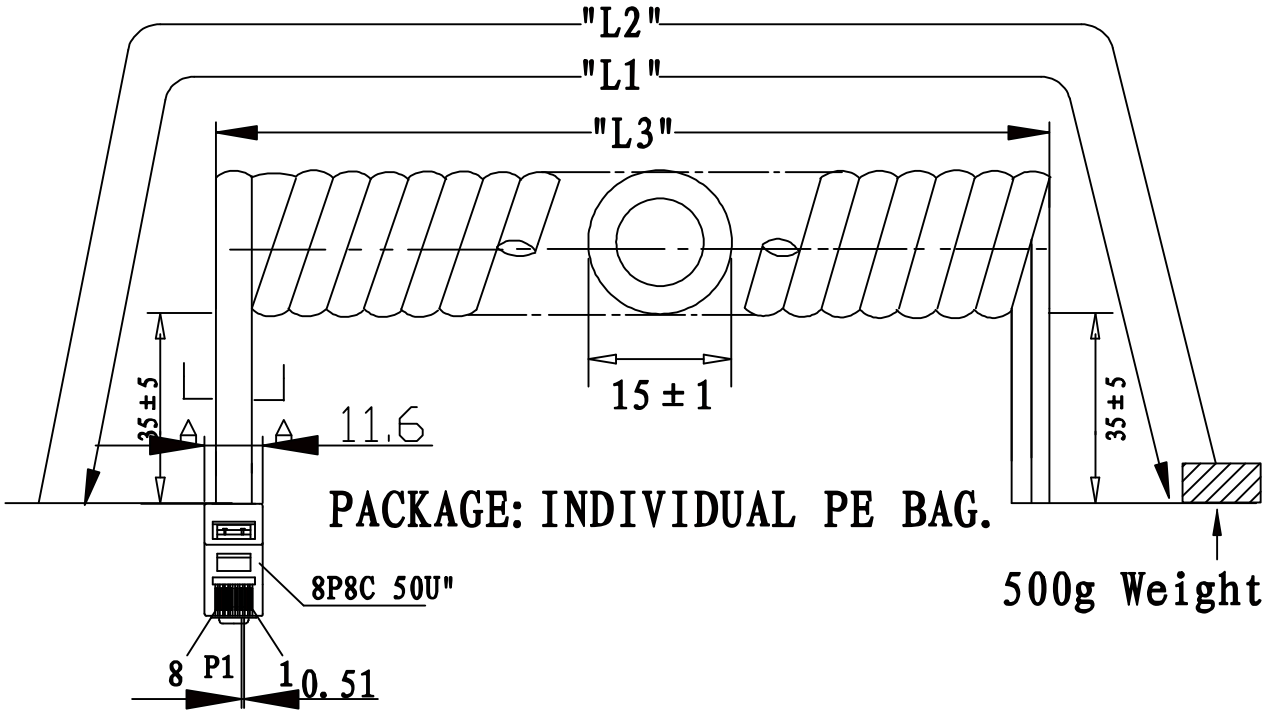

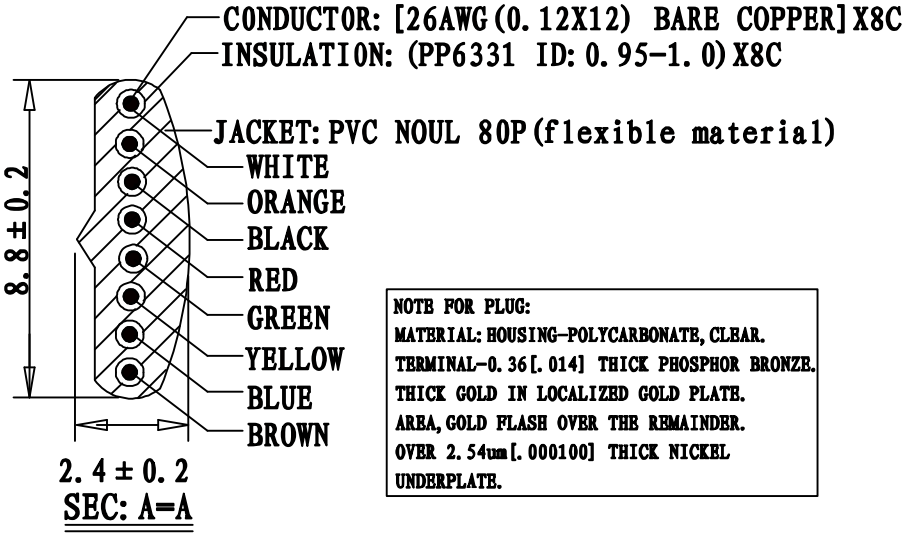

NOTE FOR PLUG:
MATERIAL: HOUSING-POLYCARBONATE, CLEAR.
TERMINAL-0.36[.014] THICK PHOSPHOR BRONZE.
THICK GOLD IN LOCALIZED GOLD PLATE.
AREA, GOLD FLASH OVER THE REMAINDER.
OVER 2.54um[.000100] THICK NICKEL
UNDERPLATE.

P1	COLOR
1	WHITE
2	ORANGE
3	BLACK
4	RED
5	GREEN
6	YELLOW
7	BLUE
8	BROWN

PART NO	DRAWING NO	BUYER COLOR	VENDOR COLOR	CUSTOMER Accepted ("L2")	Retracted Length ("L3")	CUT LENGTH "L1"
523-26-8800-BL-0005F	A	Black	BLACK LIGHT	5.0FT-5.75FT	700 ± 50	2900-3000
523-26-8800-BL-0007F	B	Black	BLACK LIGHT	7.0FT-8.05FT	1000 ± 50	4000-4200
523-26-8800-BL-0010F	C	Black	BLACK LIGHT	10.0FT-11.5FT	1500 ± 50	5900-6100
523-26-8800-BL-0012F	D	Black	BLACK LIGHT	12.0FT-13.8FT	1650 ± 50	7000-7200
523-26-8800-BL-0014F	E	Black	BLACK LIGHT	14.0FT-16.1FT	1900 ± 50	7600-7800
523-26-8800-BL-0025F	F	Black	BLACK LIGHT	25.0FT-28.75FT	3200 ± 50	14300-14500

REVISE	VERSION	BASIS	CONTENTS
12-02-20	A/0	T0210A	NEW DRAWING

CnC Tech, LLC
Industrial Cable and Connector Technology

IDRAWING NO: 671-341	CUSTOMER: L-671
ITEM NO: 8C COILD CORD P+O PLUG	UNIT: mm
DATE: 2012-02-20	ISSUE: (A/0)
DRAWN: QE:	QA:
SALES DEPT:	SALES MANAGER: