REV.	DESCRIPTION	DATE
A	NEW DRAWING	1/3/2006
B	updated PCB layout	2/6/2008
C	added TR package option	11/29/2012

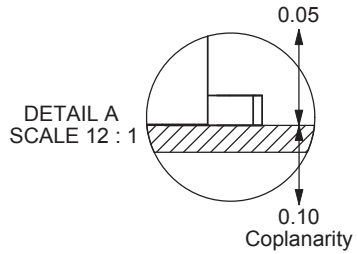

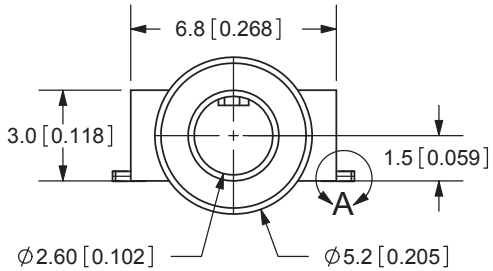

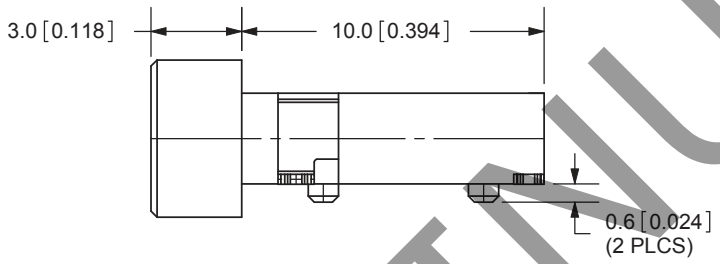

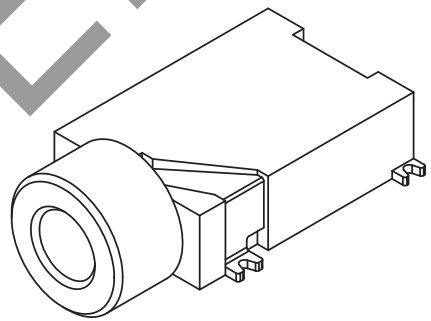

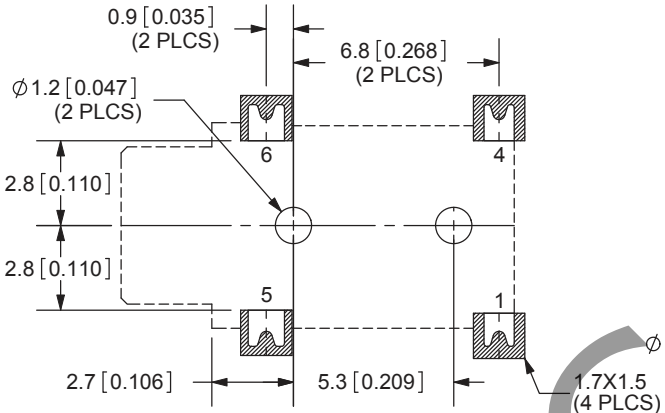

PCB LAYOUT
TOP VIEW

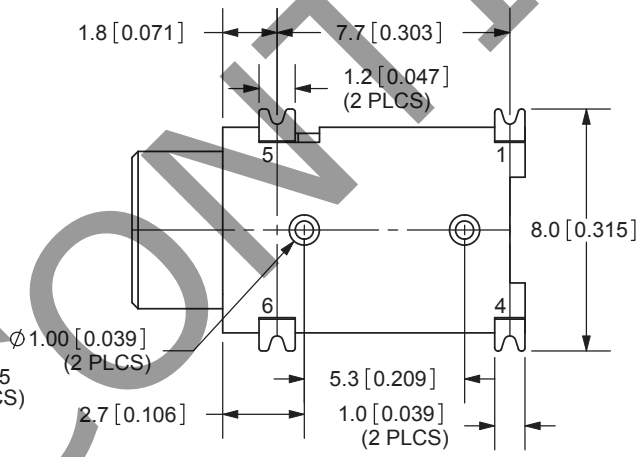

Note:
Add suffix "-TR" to the model number for tape & reel packaging

TOLERANCE:
X.X ±0.3mm
X.XX ±0.2mm

MODEL NO.	SJ-42524-SMT
SCHEMATIC	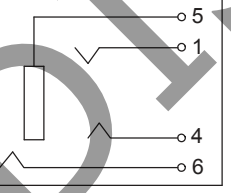

SPECIFICATIONS:
RATING: 16V DC @ 300mA
CONTACT RESISTANCE: 100m OHMS MAX
INSULATION RESISTANCE: 100M OHMS MIN: 500V DC
VOLTAGE WITHSTAND: 500V AC R.M.S. FOR 1 MINUTE
LIFE: 5,000 CYCLES
OPERATING TEMP: -40 ~ +85C

	MATERIAL	PLATING
TERMINAL 1	Titanium Copper	Silver
TERMINAL 4	Titanium Copper	Silver
TERMINAL 5	Phosphor Bronze	Silver
TERMINAL 6	Brass	Gold
HOUSING	PBT	

CUI INC
20050 SW 112th Ave.
Tualatin, OR 97062
Phone: 503-612-2300
800-275-4899
Fax: 503-612-2383
Website: www.cui.com

TITLE: SMT AUDIO JACK W/4 CONDUCTORS 2.5mm		REV: C
PART NO. SJ-42524-SMT	UNITS: MM [INCHES]	
DRAWN BY: ZRJ	APPROVED BY:	SCALE: 4:1

PC FILE NAME: SJ-42524-SMT

COPYRIGHT 2012 BY CUI INC.

DISCONTINUED

REV.	DESCRIPTION	DATE
A	NEW DRAWING	1/3/2006
B	updated PCB layout	2/6/2008
C	added TR package option	11/29/2012

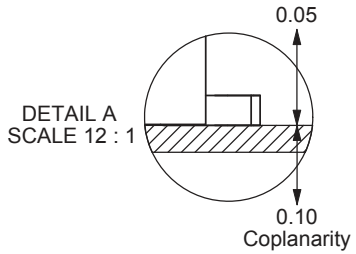

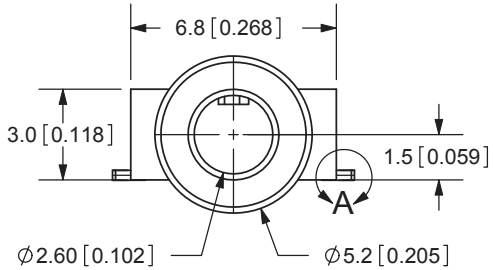

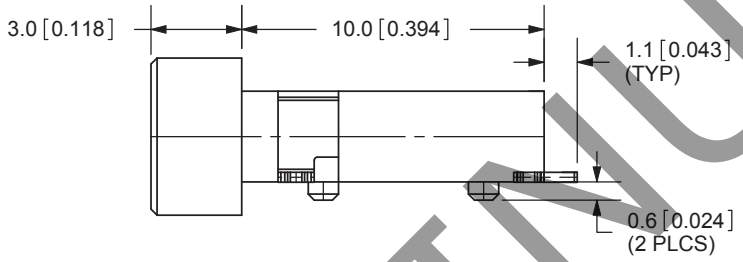

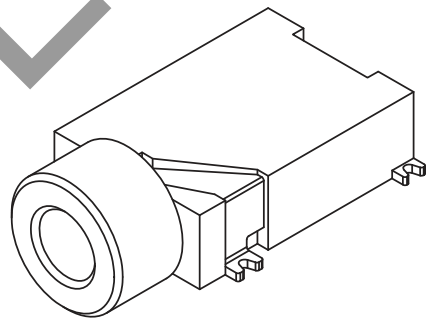

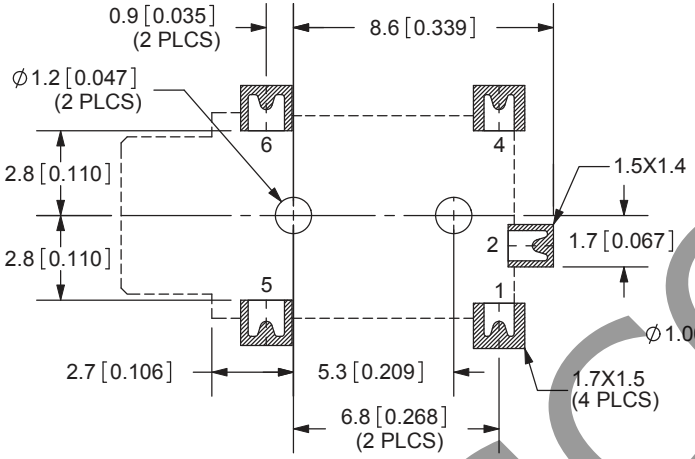

PCB LAYOUT
TOP VIEW

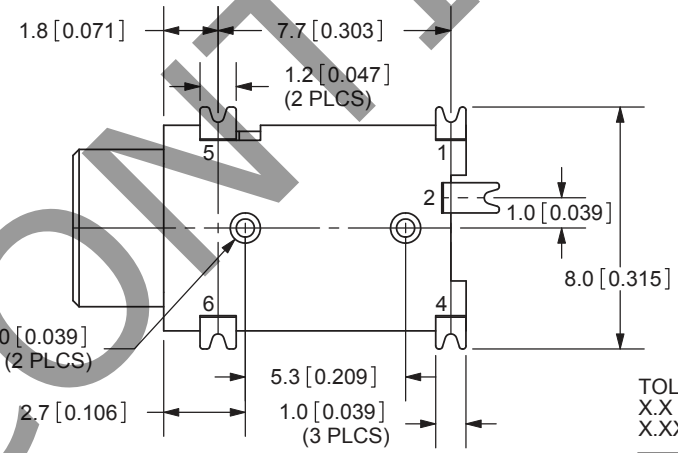

Note:
Add suffix "-TR" to the model number for tape & reel packaging

TOLERANCE:
X.X ±0.3mm
X.XX ±0.2mm

RoHS

SPECIFICATIONS:
RATING: 16V DC @ 300mA
CONTACT RESISTANCE: 100m OHMS MAX
INSULATION RESISTANCE: 100M OHMS MIN: 500V DC
VOLTAGE WITHSTAND: 500V AC R.M.S. FOR 1 MINUTE
LIFE: 5,000 CYCLES
OPERATING TEMP: -40 ~ +85C

MODEL NO.	SJ-42525RS-SMT
SCHEMATIC	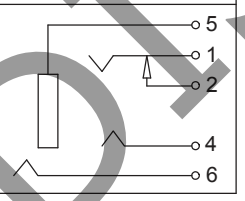

	MATERIAL	PLATING
TERMINAL 1	Titanium Copper	Silver
TERMINAL 2	Brass	Silver
TERMINAL 4	Titanium Copper	Silver
TERMINAL 5	Phosphor Bronze	Silver
TERMINAL 6	Brass	Gold
HOUSING	PBT	

CUI INC
20050 SW 112th Ave.
Tualatin, OR 97062
Phone: 503-612-2300
800-275-4899
Fax: 503-612-2383
Website: www.cui.com

TITLE: SMT AUDIO JACK W/4 CONDUCTORS 2.5mm	REV: C
PART NO. SJ-42525RS-SMT	UNITS: MM [INCHES]
DRAWN BY: ZRJ	APPROVED BY:
SCALE: 4:1	

PC FILE NAME:
SJ-42525RS-SMT

COPYRIGHT 2012 BY CUI INC.

DISCONTINUED

REV.	DESCRIPTION	DATE
A	NEW DRAWING	1/3/2006
B	updated PCB layout	2/6/2008
C	housing material change	2/9/2011
D	added TR package option	11/29/2012

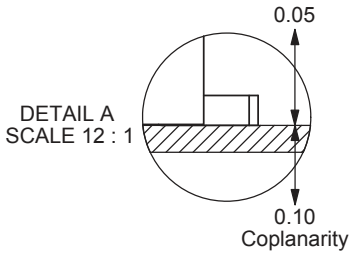

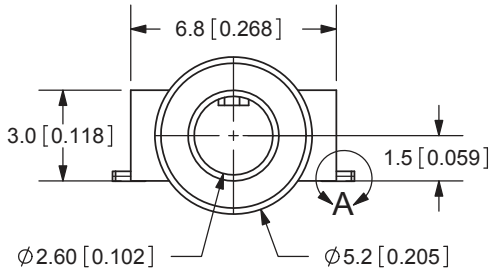

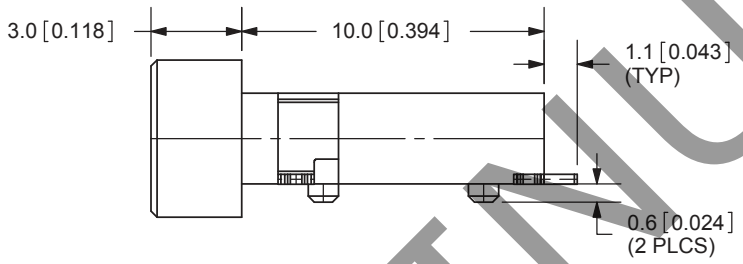

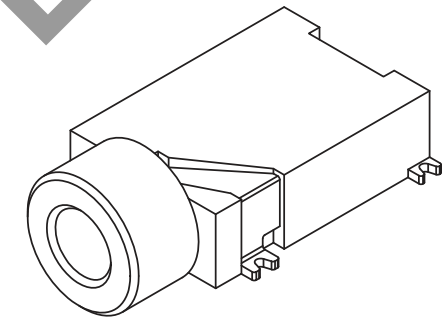

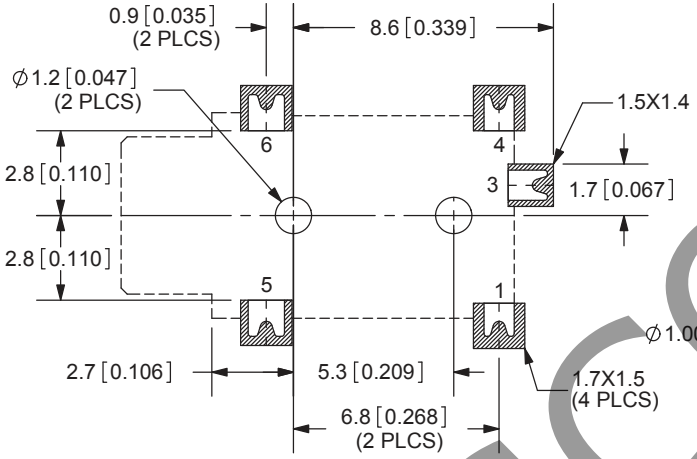

PCB LAYOUT
TOP VIEW

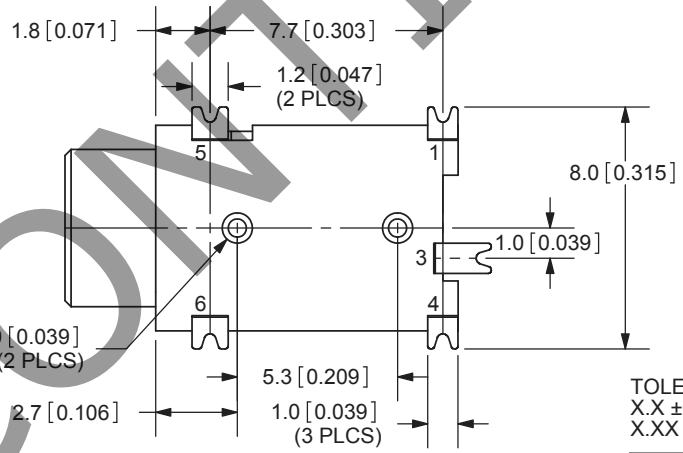

Note:
Add suffix "-TR" to the model number for tape & reel packaging

TOLERANCE:
X.X ±0.3mm
X.XX ±0.2mm

RoHS

SPECIFICATIONS:
RATING: 16V DC @ 300mA
CONTACT RESISTANCE: 100m OHMS MAX
INSULATION RESISTANCE: 100M OHMS MIN: 500V DC
VOLTAGE WITHSTAND: 500V AC R.M.S. FOR 1 MINUTE
LIFE: 5,000 CYCLES

MODEL NO.	SJ-42525TS-SMT
SCHEMATIC	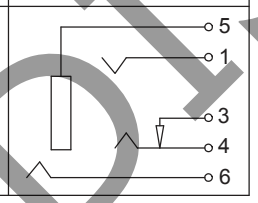

	MATERIAL	PLATING
TERMINAL 1	Titanium Copper	Silver
TERMINAL 3	Brass	Silver
TERMINAL 4	Titanium Copper	Silver
TERMINAL 5	Phosphor Bronze	Silver
TERMINAL 6	Brass	Gold
HOUSING	LCP	

CUI INC
20050 SW 112th Ave.
Tualatin, OR 97062
Phone: 503-612-2300
800-275-4899
Fax: 503-612-2383
Website: www.cui.com

TITLE: SMT AUDIO JACK W/4 CONDUCTORS 2.5mm	REV: D
PART NO. SJ-42525TS-SMT	UNITS: MM [INCHES]
DRAWN BY: ZRJ	APPROVED BY:
SCALE: 4:1	

PC FILE NAME: SJ-42525TS-SMT

COPYRIGHT 2012 BY CUI INC.

DISCONTINUED

REV.	DESCRIPTION	DATE
A	NEW DRAWING	1/3/2006
B	updated PCB layout	2/6/2008
C	housing material change	2/9/2011
D	added TR package option	11/29/2012

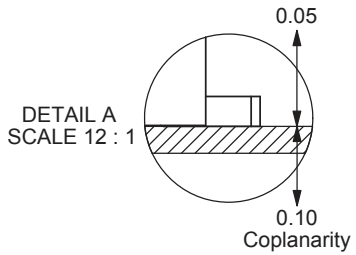

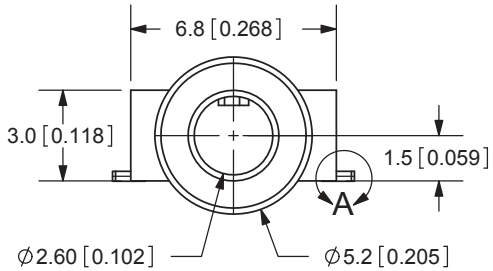

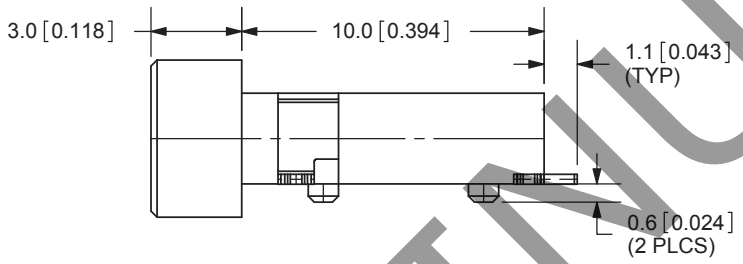

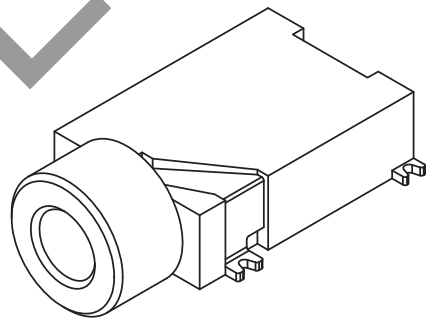

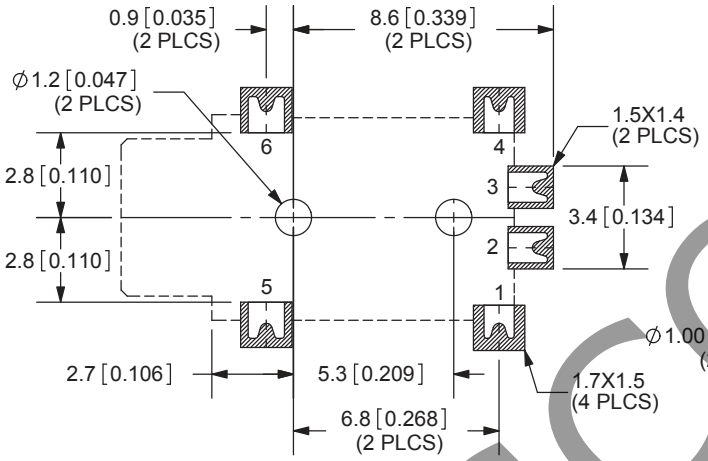

PCB LAYOUT
TOP VIEW

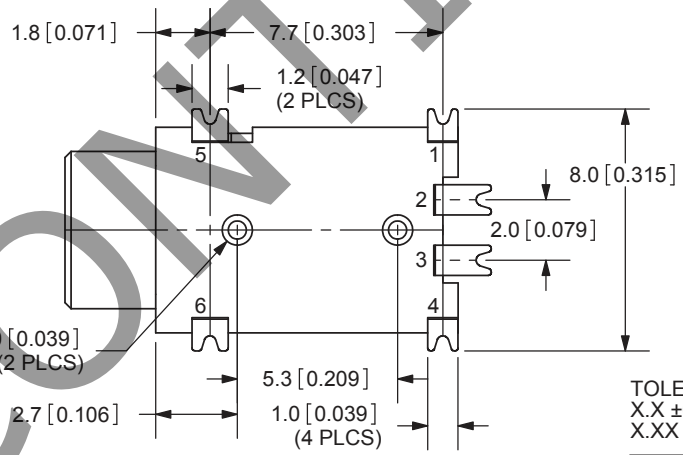

Note:
Add suffix "-TR" to the model number for tape & reel packaging

TOLERANCE:
X.X ±0.3mm
X.XX ±0.2mm

SPECIFICATIONS:
RATING: 16V DC @ 300mA
CONTACT RESISTANCE: 100m OHMS MAX
INSULATION RESISTANCE: 100M OHMS MIN: 500V DC
VOLTAGE WITHSTAND: 500V AC R.M.S. FOR 1 MINUTE
LIFE: 5,000 CYCLES

MODEL NO.	SJ-42526-SMT
SCHEMATIC	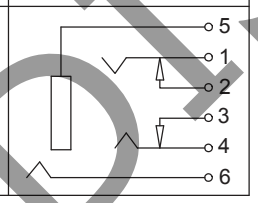

	MATERIAL	PLATING
TERMINAL 1	Titanium Copper	Silver
TERMINAL 2	Brass	Silver
TERMINAL 3	Brass	Silver
TERMINAL 4	Titanium Copper	Silver
TERMINAL 5	Phosphor Bronze	Silver
TERMINAL 6	Brass	Gold
HOUSING	LCP	

CUI INC
20050 SW 112th Ave.
Tualatin, OR 97062
Phone: 503-612-2300
800-275-4899
Fax: 503-612-2383
Website: www.cui.com

TITLE: SMT AUDIO JACK W/4 CONDUCTORS 2.5mm	REV: D
PART NO. SJ-42526-SMT	UNITS: MM [INCHES]
DRAWN BY: ZRJ	APPROVED BY:
SCALE: 4:1	

PC FILE NAME: SJ-42526-SMT

COPYRIGHT 2012 BY CUI INC.

DISCONTINUED