© 2019 TE Connectivity. All Rights Reserved.

REVISIONS					
P	LTR	DESCRIPTION	DATE	DWN	APVD
	B	REVISED PER ECO-18-018129	23OCT2019	AP	DS

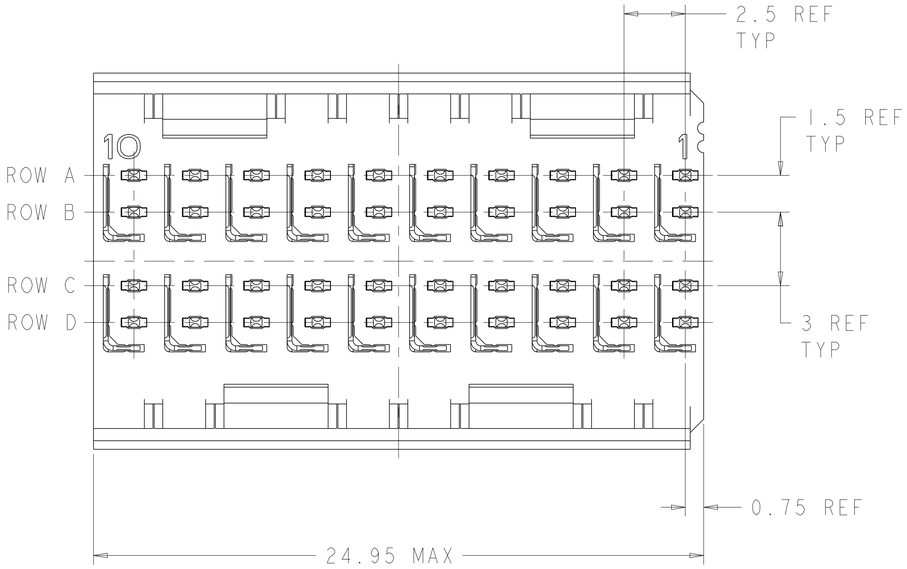

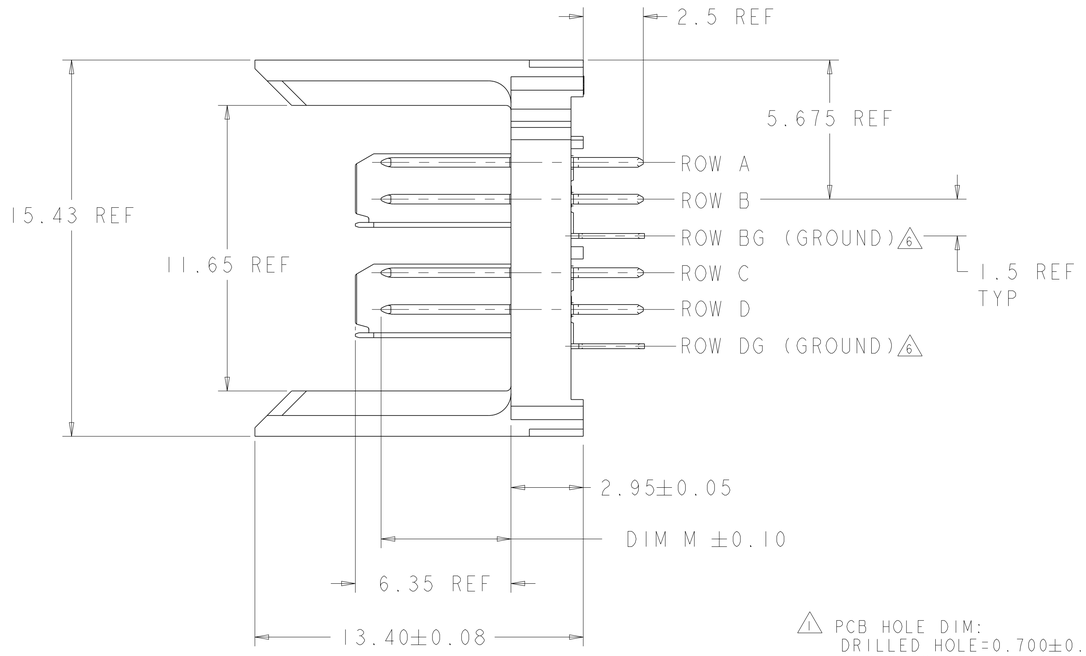

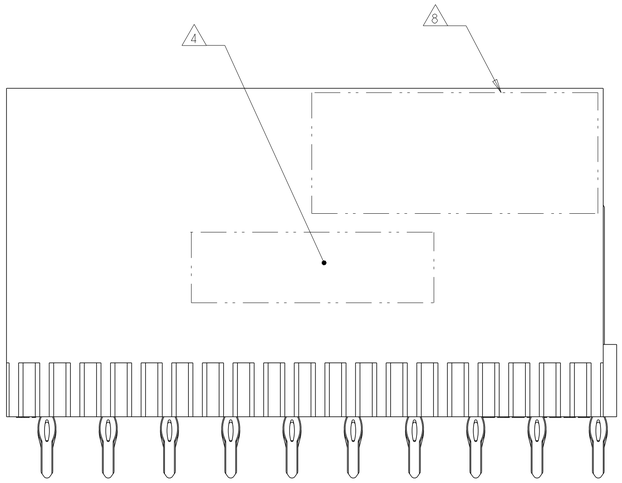

1. PCB HOLE DIM:
   DRILLED HOLE=0.700±0.025mm
   FINISHED HOLE=0.60±0.05mm
   Cu-THICKNESS=0.0375±0.0125mm
   SnPb THICKNESS=0.007±0.003mm
2. MATERIAL:
   CONTACT AND SHIELD - PHOSPHOR BRONZE
   HOUSING - GLASS FILLED POLYESTER
3. FINISH: CONTACT AND SHIELD
   MATING AREA - 0.76µm MIN GOLD OVER 1.27µm MIN NICKEL
   COMPLIANT PIN AREA - 0.5µm MIN BRIGHT TIN
   OVER 1.27µm MIN NICKEL
4. CONNECTOR MARKED WITH PART NUMBER AND DATE CODE
5. DATUMS AND BASIC DIMENSIONS ESTABLISHED BY CUSTOMER
6. THE TWO GROUNDS IN EACH COLUMN ARE COMMONED
7. CONTACT AREA LUBRICATED WITH BELLCORE
   APPROVED LUBRICANT. TECHNICAL REFERANCE:
   GR-1217-CORE, ISSUE 1, NOVEMBER 1995
8. TE OR TE CONNECTIVITY LOGO IS LOCATED.

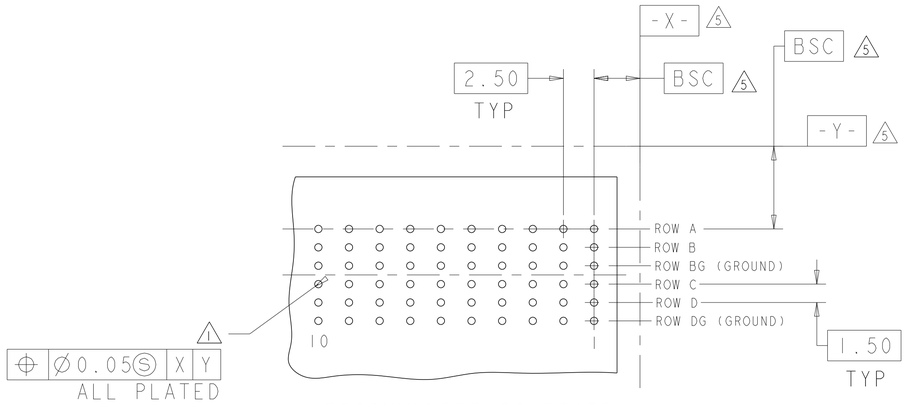

1 ⌖ Ø0.05 Ⓢ X Y
ALL PLATED
THRU HOLES

RECOMMENDED PC BOARD
LAYOUT, BACKPLANE,
COMPONENT SIDE SHOWN
SCALE 4:1

THIS PRODUCT HAS NOT
COMPLETED VALIDATION TESTING

5.30	1469323-1
DIM M	PART NUMBER

THIS DRAWING IS A CONTROLLED DOCUMENT.

DIMENSIONS: mm

TOLERANCES UNLESS OTHERWISE SPECIFIED:
0 PLC ±-
1 PLC ±-
2 PLC ±-
3 PLC ±-
4 PLC ±-
ANGLES ±-

MATERIAL - 2
FINISH - 3

DWN DK SCHRUM 23JUN2003
CHK RA PATTERSON 23JUN2003
APVD -
PRODUCT SPEC -
APPLICATION SPEC -
WEIGHT -

TE Connectivity

NAME HEADER ASSEMBLY, 2 PAIR, 2.5mm TAIL, 25mm, HMZd

SIZE	CAGE CODE	DRAWING NO	RESTRICTED TO
A1	00779	C-1469323	

CUSTOMER DRAWING | SCALE 8:1 | SHEET 1 OF 1 | REV B

4805 (3/13)