Ordering number : EN6505

# LB1933M

Monolithic Digital IC

# Low-saturation Forward/Reverse Motor Drive

ON Semiconductor®

http://onsemi.com

## Overview

The 1933M is a forward/reverse motor driver that supports low voltage drive and features low-saturation outputs in a miniature package.

## Features

- Low saturation output: $V_O$sat=0.3V typ ($I_O$=300mA)

## Specifications

### Absolute Maximum Ratings at Ta = 25°C

| Parameter | Symbol | Conditions | Ratings | Unit |
|---|---|---|---|---|
| Maximum supply voltage | $V_{CC}$ max | | -0.3 to +10.5 | V |
| | $V_S$ max | | -0.3 to +10.5 | V |
| Maximum Output applied voltage | $V_{OUT}$ | | $V_S$+$V_{SF}$ | V |
| Maximum input applied voltage | $V_{IN}$ | | -0.3 to +10.0 | V |
| Maximum output current | $I_{GND}$ | Per channel | 1.0 | A |
| Allowable power dissipation | Pd max1 | Independent IC | 550 | mW |
| | Pd max2 | * Mounted on a specified board | 800 | mW |
| Operating temperature | Topr | | -30 to +75 | °C |
| Storage temperature | Tstg | | -40 to +150 | °C |

Note *: Mounted on a specified board: 30mm×30mm×1.5mm, glass epoxy

Stresses exceeding Maximum Ratings may damage the device. Maximum Ratings are stress ratings only. Functional operation above the Recommended Operating Conditions is not implied. Extended exposure to stresses above the Recommended Operating Conditions may affect device reliability.

Semiconductor Components Industries, LLC, 2013

## Allowable Operating Ranges at Ta = 25°C

| Parameter | Symbol | Conditions | Ratings | Unit |
|---|---|---|---|---|
| Power supply voltage range | $V_{CC}$ | | 2.2 to 7.5 | V |
| | $V_S$ | | 1.8 to 7.5 | V |
| Input high-level voltage | $V_{IH}$ | | 1.8 to 7.5 | V |
| Input low-level voltage | $V_{IL}$ | | -0.3 to +0.7 | V |

## Electrical Characteristics at Ta = 25°C, $V_S1=V_S2=V_{CC}=3V$

| Parameter | Symbol | Conditions | Ratings | | | Unit |
|---|---|---|---|---|---|---|
| | | | min | typ | max | |
| Power current | $I_{CCO}$ | TOTAL, ENA=0V, $V_{IN}$=0V | | 0.1 | 10 | µA |
| | $I_{CC}$ | $V_{CC}$, ENA=3V, $V_{IN}$=3V | | 5 | 7 | mA |
| | $I_S$ | $V_S1+V_S2$, ENA=3V, $V_{IN}$=3V | | 16 | 25 | mA |
| Output saturation voltage | $V_Osat1$ | ENA=3V, $V_{IN}$=3V or 0V, $I_{OUT}$=300mA | | 0.30 | 0.45 | V |
| | $V_Osat2$ | ENA=2.2V, $V_{IN}$=2.2V or 0V, $V_{CC}$=2.2V, $V_S$=2.0V, $I_{OUT}$=150mA | | | 0.20 | V |
| Input current | $I_{IN}$ | $V_{IN}$=3V | | | 80 | µA |
| | $I_{ENA}$ | $V_{ENA}$=3V | | | 80 | µA |
| **Spark killer diode** | | | | | | |
| Reverse current | $I_S$ (leak) | $V_{CC}=V_S$=7V | | | 30 | µA |
| Forward voltage | $V_{SF}$ | $I_{OUT}$=400mA | | | 1.7 | V |

## Package Dimensions

unit : mm (typ)

3111A

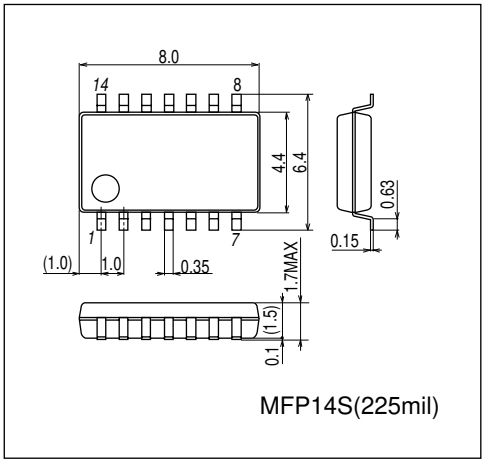


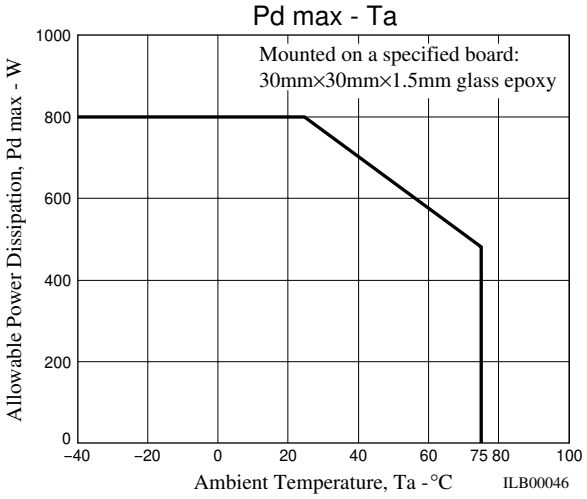

## Pin Assignment

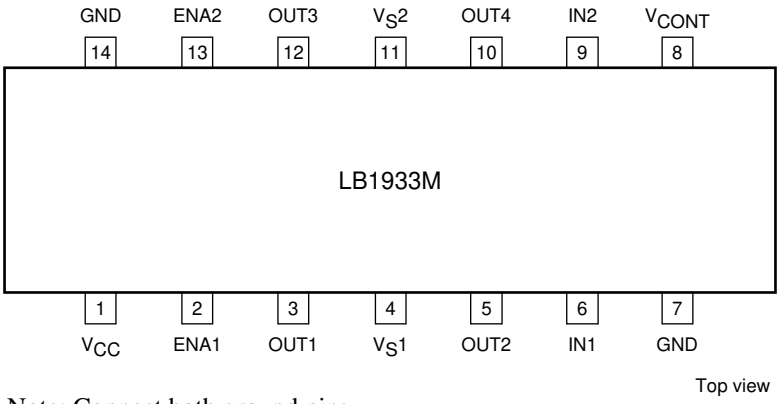


Note: Connect both ground pins.

ILB00047

## Truth Table

| IN 1/2 | ENA 1/2 | OUT 1/3 | OUT 2/4 | Mode |
|---|---|---|---|---|
| L | H | H | L | Forward |
| H | H | L | H | Reverse |
| L | L | OFF | OFF | Standby |
| H | L | OFF | OFF | Standby |

## Equivalent Circuit Block Diagram

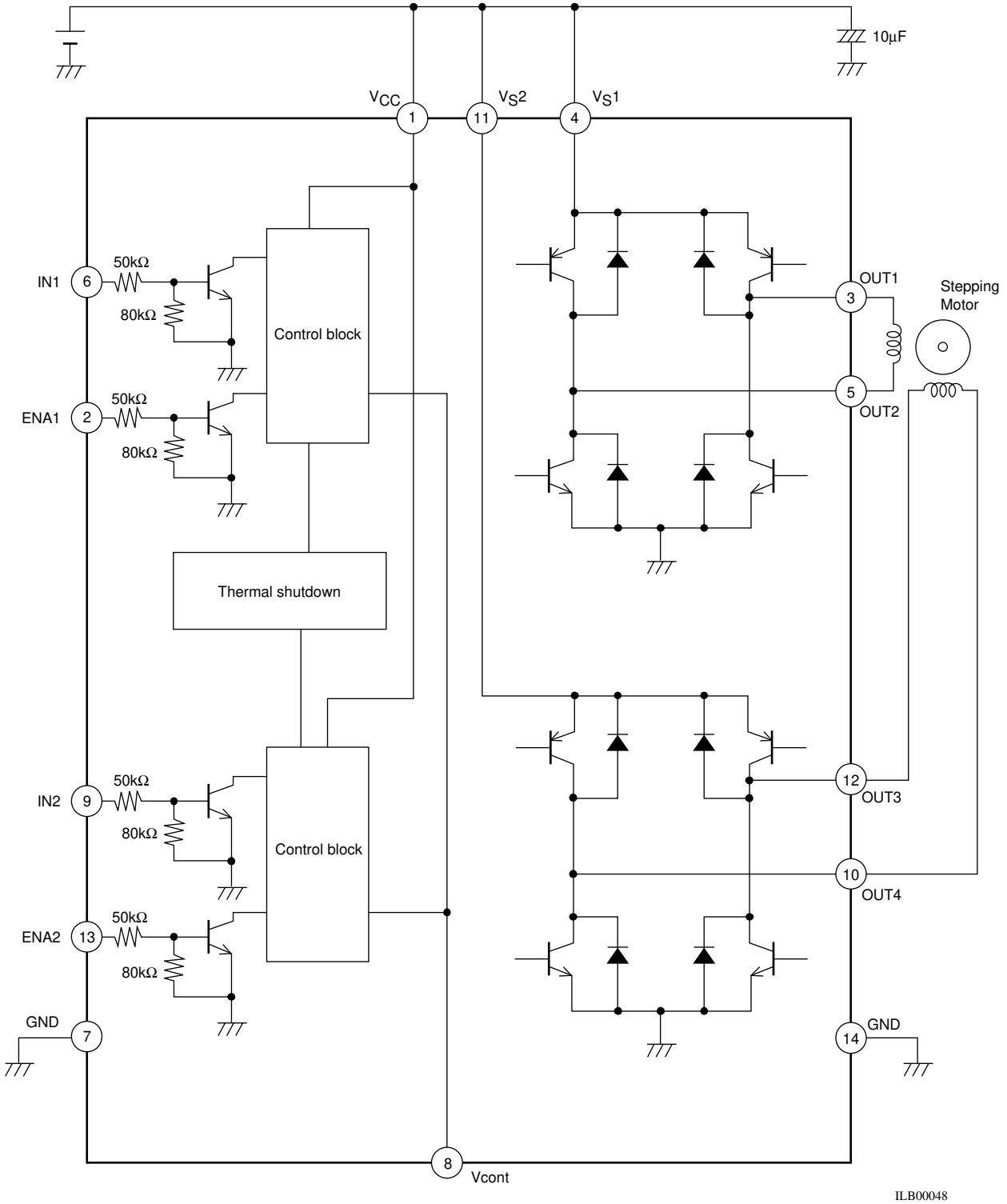


* There are no constraints on the relationship between the applied voltage to $V_{CC}$, $V_S1$, $V_S2$, ENA1, ENA2, IN1, and IN2 within the absolute maximum ratings (For example, this IC can be used at $V_{CC}$=3V, $V_S1$=$V_S2$=2V, and ENA=IN=5V)

ON Semiconductor and the ON logo are registered trademarks of Semiconductor Components Industries, LLC (SCILLC). SCILLC owns the rights to a number of patents, trademarks, copyrights, trade secrets, and other intellectual property. A listing of SCILLC's product/patent coverage may be accessed at www.onsemi.com/site/pdf/Patent-Marking.pdf. SCILLC reserves the right to make changes without further notice to any products herein. SCILLC makes no warranty, representation or guarantee regarding the suitability of its products for any particular purpose, nor does SCILLC assume any liability arising out of the application or use of any product or circuit, and specifically disclaims any and all liability, including without limitation special, consequential or incidental damages. "Typical" parameters which may be provided in SCILLC data sheets and/or specifications can and do vary in different applications and actual performance may vary over time. All operating parameters, including "Typicals" must be validated for each customer application by customer's technical experts. SCILLC does not convey any license under its patent rights nor the rights of others. SCILLC products are not designed, intended, or authorized for use as components in systems intended for surgical implant into the body, or other applications intended to support or sustain life, or for any other application in which the failure of the SCILLC product could create a situation where personal injury or death may occur. Should Buyer purchase or use SCILLC products for any such unintended or unauthorized application, Buyer shall indemnify and hold SCILLC and its officers, employees, subsidiaries, affiliates, and distributors harmless against all claims, costs, damages, and expenses, and reasonable attorney fees arising out of, directly or indirectly, any claim of personal injury or death associated with such unintended or unauthorized use, even if such claim alleges that SCILLC was negligent regarding the design or manufacture of the part. SCILLC is an Equal Opportunity/Affirmative Action Employer. This literature is subject to all applicable copyright laws and is not for resale in any manner.