THIS DRAWING IS UNPUBLISHED. RELEASED FOR PUBLICATION -,- .
© COPYRIGHT - By - ALL RIGHTS RESERVED.

LOC	DIST
AF	50

REVISIONS

P	LTR	DESCRIPTION	DATE	DWN	APVD
	F	REVISED PER ECR-12-013518	26NOV2012	KH	PD

1 CONTINUOUS STRIP ON REELS.

2 WIRE SIZE IS FOR ONE #14 AWG OR (ONE #20 WITH ONE #14 AWG).

3 INSULATION RANGE IS TWO AT .140 MAX DIA.

4 MATING TAB THK IS .032±.001

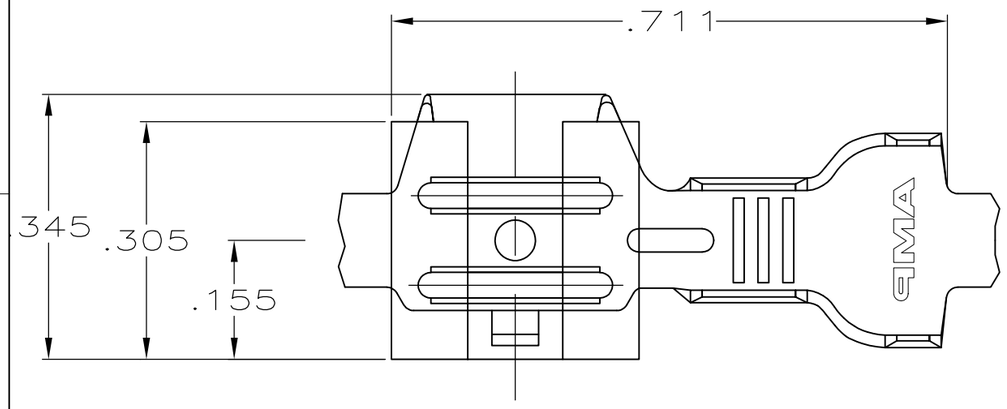

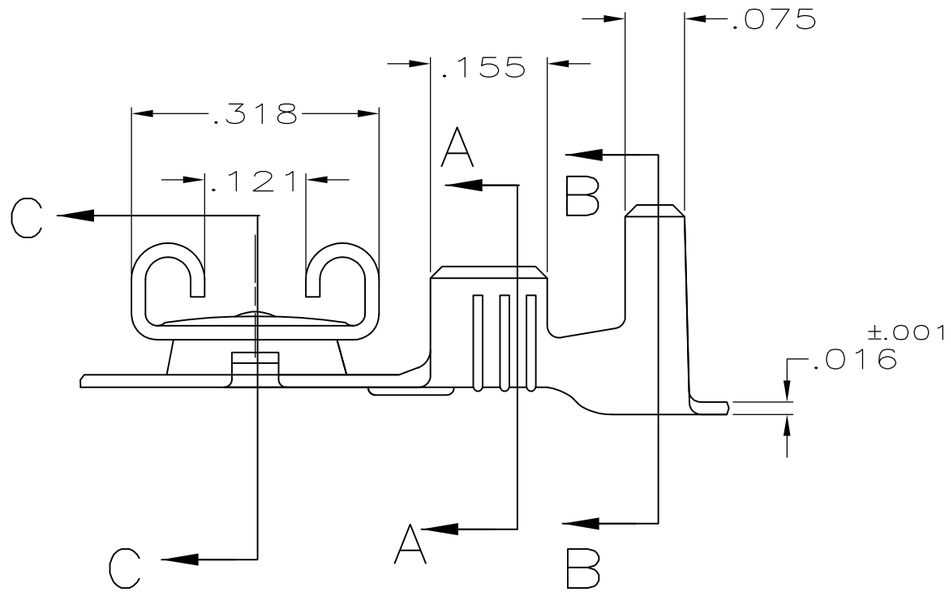

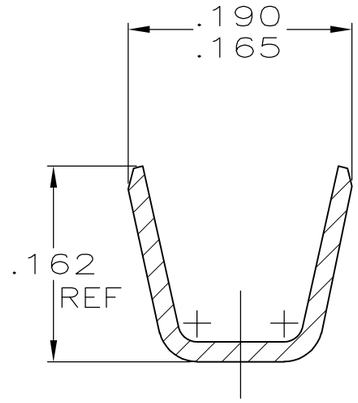

SECTION A-A
SCALE 8:1

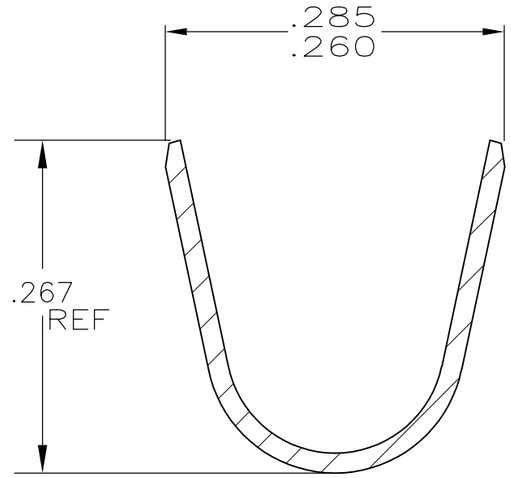

SECTION B-B
SCALE 8:1

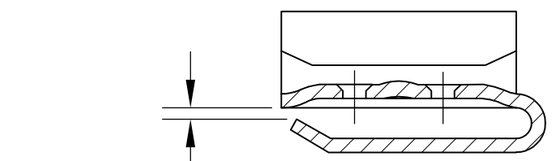

SECTION C-C

1217896-1
PART NO.

THIS DRAWING IS A CONTROLLED DOCUMENT.

DIMENSIONS: INCHES

TOLERANCES UNLESS OTHERWISE SPECIFIED:
0 PLC ± -
1 PLC ± -
2 PLC ± -
3 PLC ± .010
4 PLC ± -
ANGLES ± -

MATERIAL: BRASS
FINISH: -

DWN	JR RUTH	06NOV02
CHK	P DESANTIS	06NOV02
APVD	P DESANTIS	06NOV02
PRODUCT SPEC	—	
APPLICATION SPEC	—	
WEIGHT	—	

TE Connectivity

NAME: RECEPTACLE, FASTON, FLAG, REVERSIBLE, .250 SERIES
—

SIZE	CAGE CODE	DRAWING NO	RESTRICTED TO
A3	00779	C-1217896	—

CUSTOMER DRAWING | SCALE 5:1 | SHEET 1 OF 1 | REV F