THIS DRAWING IS UNPUBLISHED. RELEASED FOR PUBLICATION -,- .
© COPYRIGHT - BY TYCO ELECTRONICS CORPORATION. ALL RIGHTS RESERVED.

LOC	DIST
AD	00

REVISIONS

P	LTR	DESCRIPTION	DATE	DWN	APVD
	C1	REV PER ECO-20-004668	10JUN2020	ML	SZ

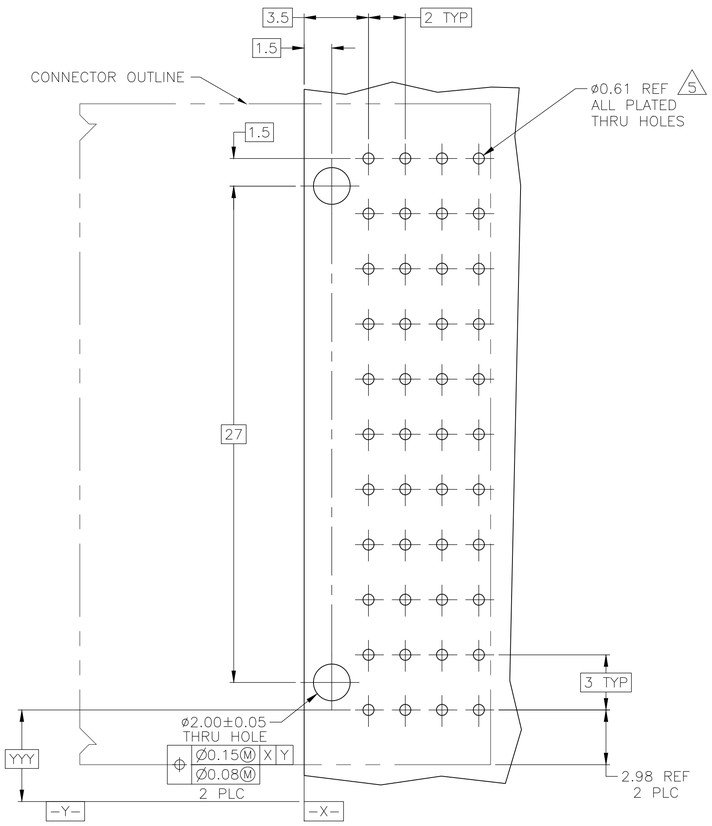

RECOMMENDED PCB HOLE LAYOUT

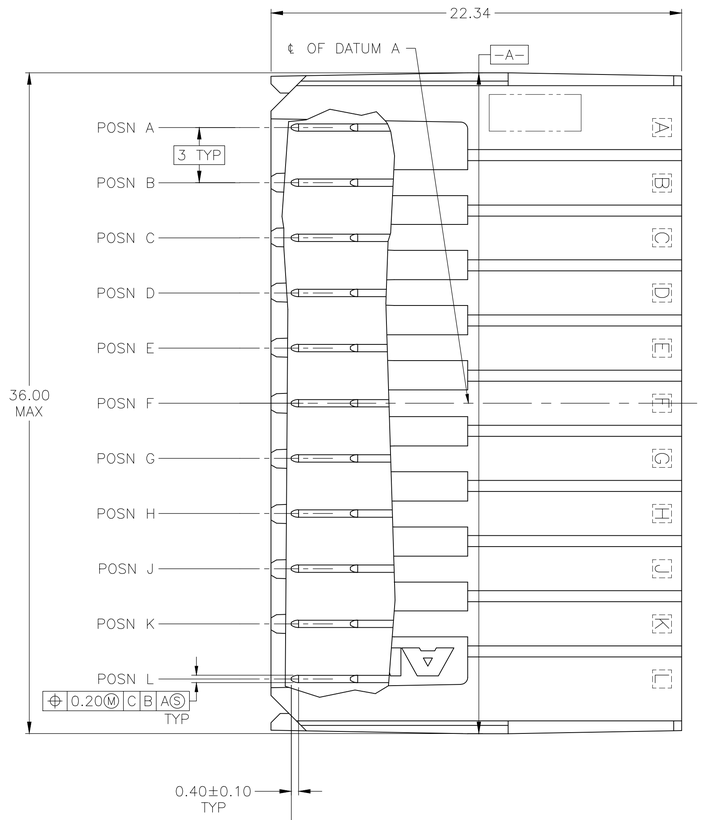

1. MATERIAL: HOUSING: POLYESTER. COLOR: GRAY. UL 94V-O.
   CONTACT: COPPER ALLOY.
2. FINISH: IN ACCORDANCE WITH PRODUCT SPECIFICATION 108-1651, GOLD PLATING OR EQUIVALENT PLATING ON PRODUCT CONTACT MATING AREA, AND MATTE TIN PLATING ON COMPLIANT PIN AREA, ALL OVER MATTE NICKEL UNDERPLATED. DETAIL PLEASE REFER TO PRODUCT SPECIFICATION 108-1651.
3. FINISH: CONTACT LUBRICATION WITH BELLCORE APPROVED LUBRICANT. TECHNICAL REFERENCE: GR-1217-CORE, ISSUE 1, NOVEMBER 1995.
4. THE 10.26±0.13 DIMENSION APPLIES IN THIS AREA.
5. REFERENCE APPLICATION SPEC 114-1103 FOR RECOMMENDED PLATED THRU HOLE DIAMETER AND PLATING THICKNESS.
6. CURRENT RATING 10A/CONTACT PER PRODUCT SPEC 108-1651.

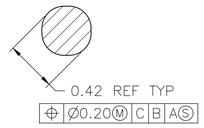

SECTION W-W
SCALE 40:1

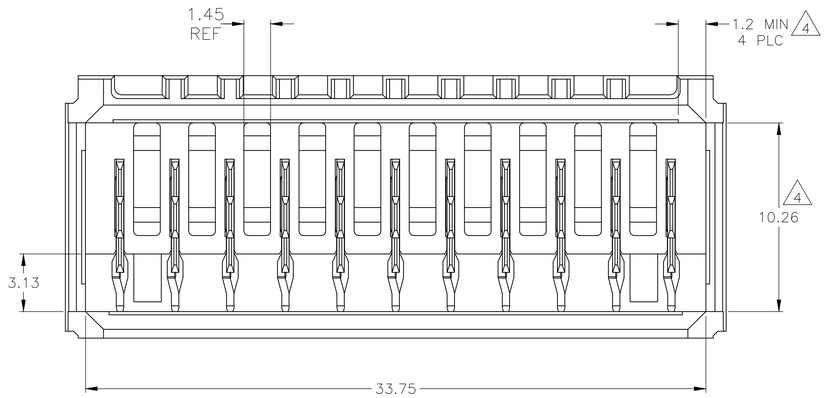

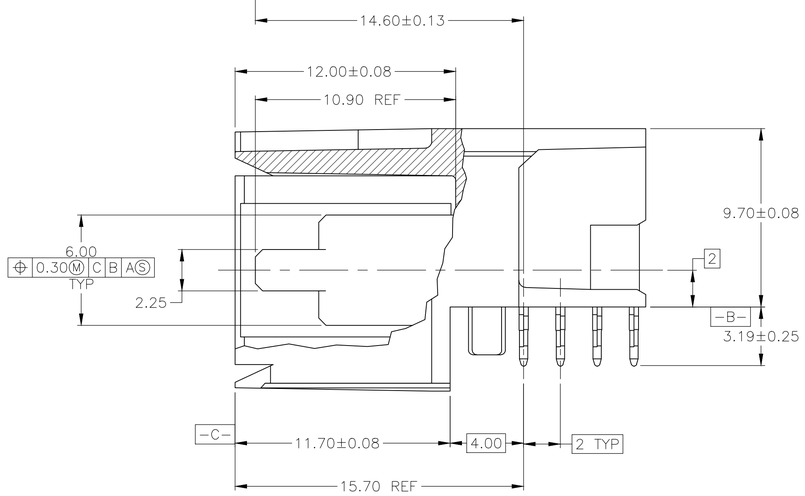

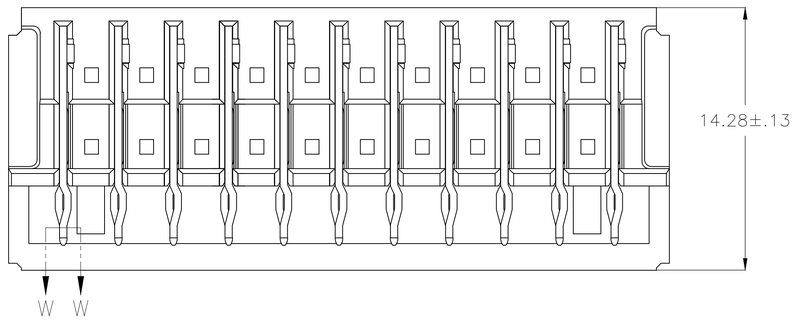

A,L	B,C,D,E,F,G,H,J,K	11	5646961-2
A,B,C,D,E,F,G,H,J,K,L	–	11	5646961-1
POSITIONS LOADED WITH 10.90 CONTACTS	POSITIONS LOADED WITH 9.30 CONTACTS	NO OF LOADED POSITIONS	PART NUMBER

THIS DRAWING IS A CONTROLLED DOCUMENT.

DIMENSIONS: mm

TOLERANCES UNLESS OTHERWISE SPECIFIED:
0 PLC ± –
1 PLC ± –
2 PLC ± 0.13
3 PLC ± –
4 PLC ± –
ANGLES ± –

MATERIAL 1
FINISH 2 3

DWN	B.CARBO	06DEC04
CHK	R.PATTERSON	06DEC04
APVD	R.PATTERSON	06DEC04
PRODUCT SPEC	108-1651	
APPLICATION SPEC	114-1103	
WEIGHT	–	

Tyco Electronics
Tyco Electronics Corporation
Harrisburg, Pa 17105-3608

NAME: ASSEMBLY, RIGHT ANGLE HEADER, W/ RETENTION PEGS, UNIVERSAL POWER MODULE

SIZE	CAGE CODE	DRAWING NO	RESTRICTED TO
A1	00779	C-5646961	–

CUSTOMER DRAWING | SCALE 1:1 | SHEET 1 OF 1 | REV C1