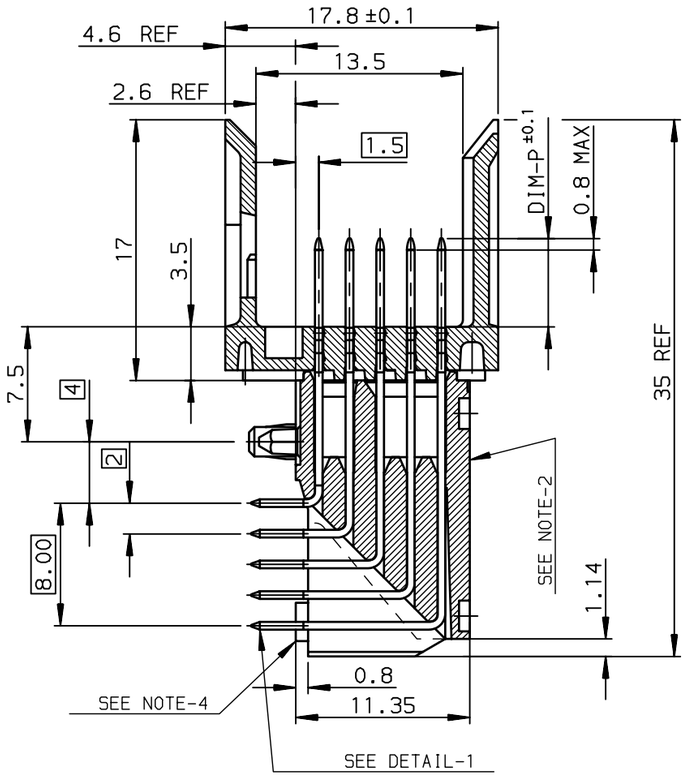

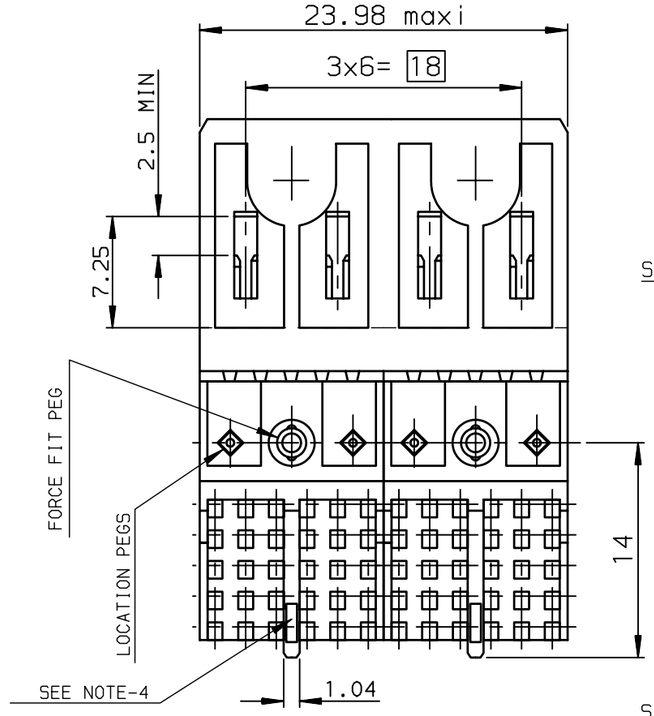

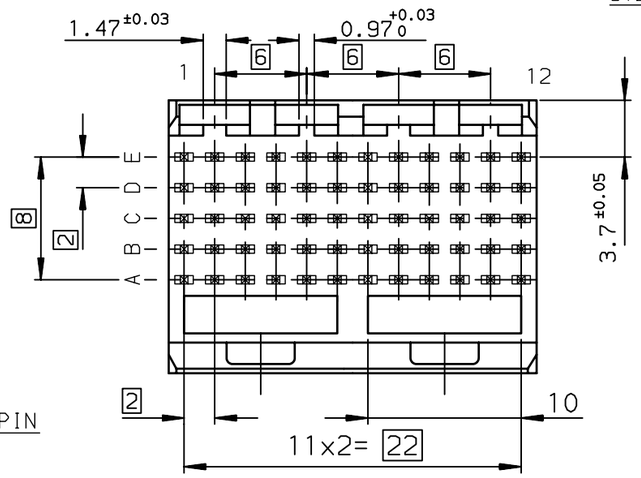

TIN LEAD PART NUMBER

Part Number: HM1L52xyP000Hz

MATING LENGTH DIM-P / REPLACE 'x' BY:

	ROW-A	ROW-B	ROW-C	ROW-D	ROW-E
A =	5.00	5.00	5.00	5.00	5.00
L =	5.75	5.75	5.75	5.75	5.75
D =	6.50	6.50	6.50	6.50	6.50
B =	6.50	5.00	5.00	5.00	5.00
C =	6.50	5.75	5.75	6.50	5.75

STD

TERMINATION LENGTH DIM-D	D=2.90 ±0.3,replace y by A
	D=3.70 ±0.3,replace y by B

LEAD FREE PART NUMBER

Part Number: HM1L52xyP000HzLF

MATING LENGTH DIM-P / REPLACE 'x' BY:

	ROW-A	ROW-B	ROW-C	ROW-D	ROW-E
A =	5.00	5.00	5.00	5.00	5.00
L =	5.75	5.75	5.75	5.75	5.75
D =	6.50	6.50	6.50	6.50	6.50
B =	6.50	5.00	5.00	5.00	5.00
C =	6.50	5.75	5.75	6.50	5.75

STD

TERMINATION LENGTH DIM-D	D=2.90 ±0.3,replace y by A
	D=3.70 ±0.3,replace y by B

GENERAL CHARACTERISTICS AND ROHS INFORMATIONS:

SEE PRODUCT SPECIFICATION GS-12-446

NOTE-2: INSERTION IN PCB, HANDLING OR BENCH PRESS

NOTE-3: IF SUFFIX "P" IS ADDED IN P/N PACKAGING IS IN TRAYS
BUT CONNECTOR MARKING IS WITHOUT "P"
EXAMPLE: HM1XXXXXXXXXH6P, MARKED HM1XXXXXXXXXH6

NOTE-4: REAR CENTRAL SUPPORT FOR BETTER ASSY ON PCB

DETAIL OF FORCE-FIT PEGS

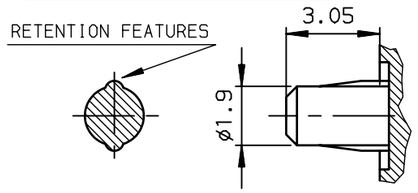

LAYOUT FOR P.C.B
(PER 12mm LENGTH)

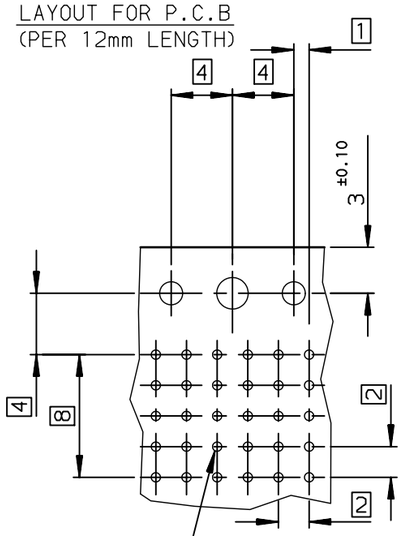

Hole according to product spec
GS-12-445 (for press-fit) ,
GS-12-446 (for STB)

DETAIL-1: SOLDER PIN

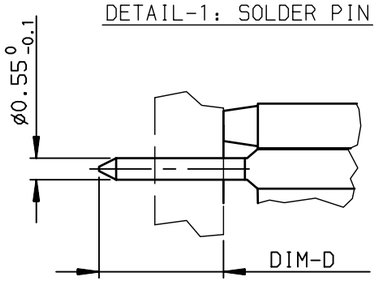

rev	ecn no	dr	date
B	-	MAS	2000/08/31
C	LS05-001	MLE	2005/03/15
D	LS06-0095	LGO	2006/07/10
E	LS07-0184	MLE	2007/07/24
-	-	-	-
-	-	-	-
-	-	-	-

European Views

www.fciconnect.com			surface ISO 1302	tolerance std ISO 406 ISO 1101		projection	mm
			TOLERANCES UNLESS OTHERWISE SPECIFIED				
Dr	CHAMPION	1997/06/17	ANGULAR	LINEAR	0.X ±0.1	size A3	Scale 2.5
Eng	LENOIR	1997/06/17			0.XX ±0.1		
Chr	LEGARE	1997/06/17	0.XX° ±2°		0.XXX ±0.1	ECN	LS07-0184
Appr	LEGARE	1997/06/17	Product family		METRAL	Spec ref -	

title: METRAL RA HEADER 5 ROW
STANDARD SOLDER 60 WAY

dwg no: C-8626-0240 Rev. E

catalog no -

CUSTOMER sheet 1 of 1

Copyright FCI.

REV F - 2006-04-17