B		91-350

NOTES:
1. UNLESS OTHERWISE SPECIFIED ALL TOLERANCES ±.016.

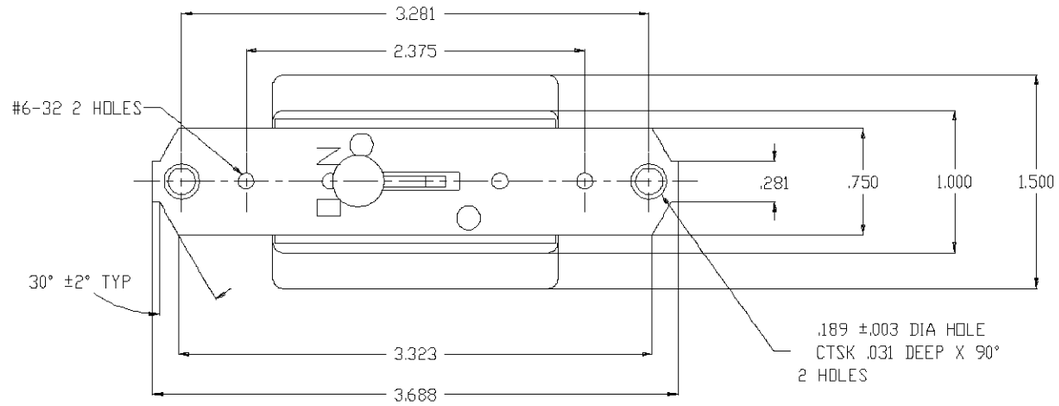

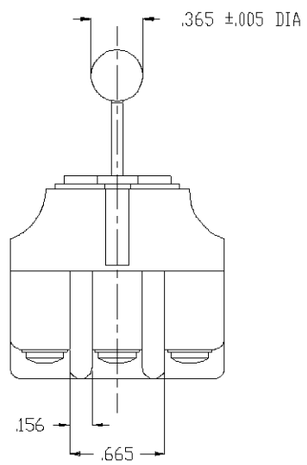

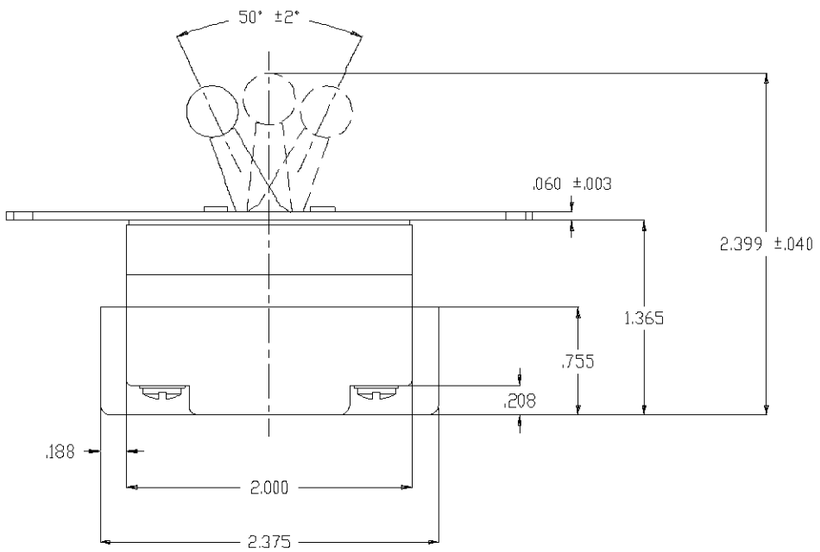

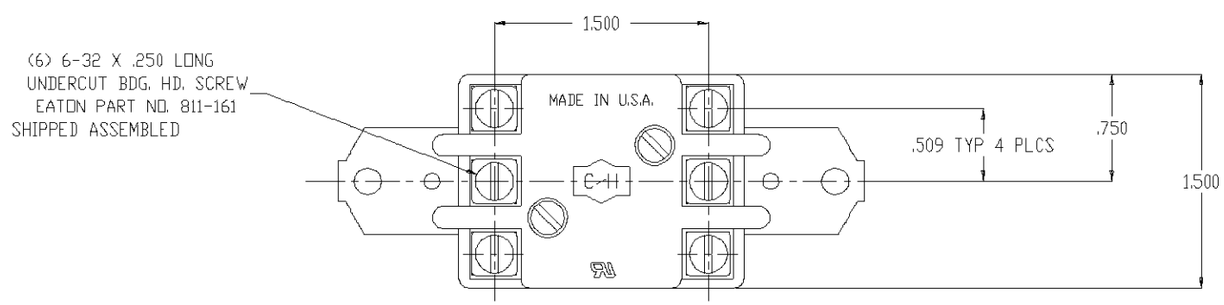

ORDER NO. 93719990

A			D		
B			E		
C			F		

THIRD ANGLE PROJECTION

EATON

TITLE : DIM DWG FOR 8337K2			
DR. W. HANSON	8/1/92	SURFACE COATING	FIRST ASSEM. WHERE LISTED
CHK.		SCALE	SUP'S
APP.		DO NOT SCALE DRAWING	SUP'D BY

Property of Tyco Electronics Corporation March, 2001
CUSTOMER DRWG: 1520192 REV: 99 PG 1 OF 1