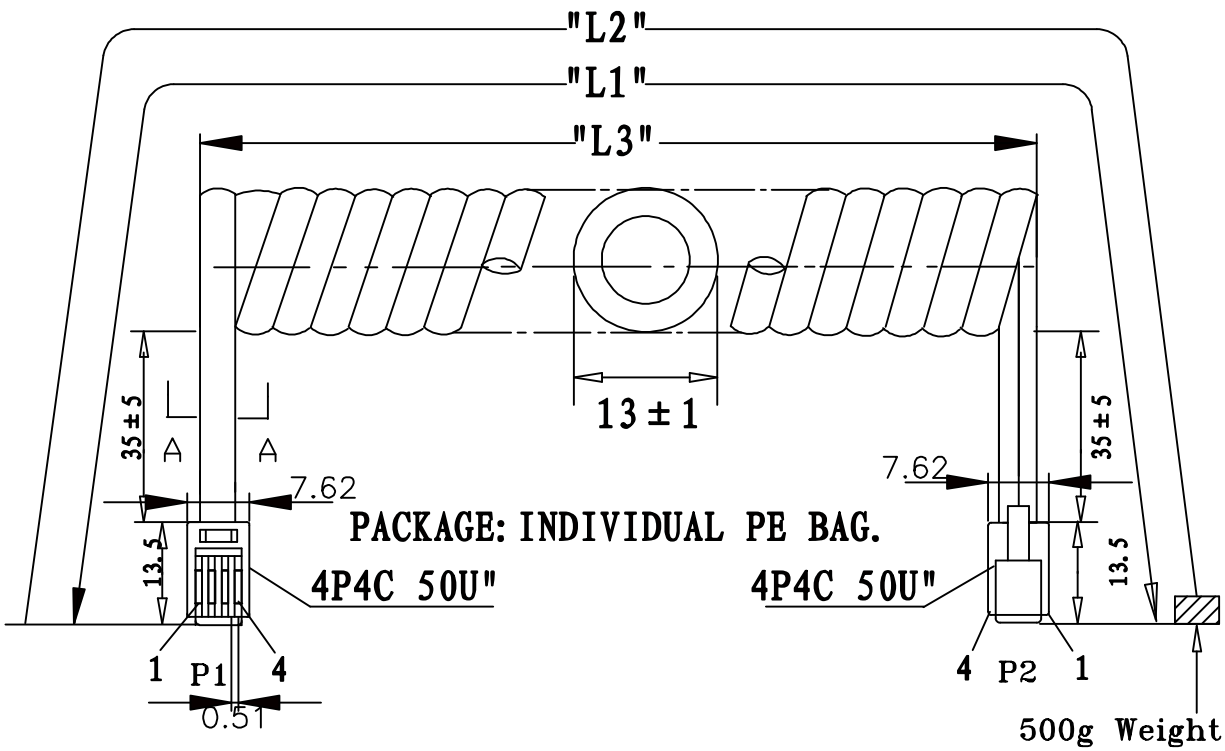

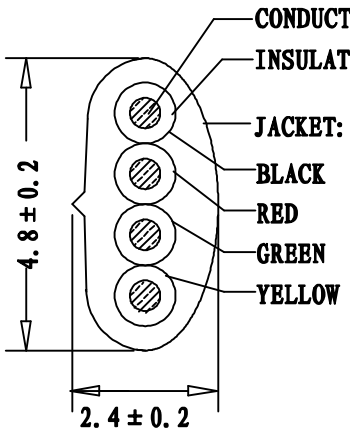

SEC:A-A

NOTE FOR PLUG:
MATERIAL: HOUSING-POLYCARBONATE, CLEAR.
TERMINAL-0.36[.014] THICK PHOSPHOR BRONZE.
THICK GOLD IN LOCALIZED GOLD PLATE.
AREA, GOLD FLASH OVER THE REMAINDER.
OVER 2.54um[.000100] THICK NICKEL
UNDERPLATE.

TERMINATION:

P1	P2	COLOR
1	4	BLACK
2	3	RED
3	2	GREEN
4	1	YELLOW

PART NO	DRAWING NO	BUYER COLOR	VENDOR COLOR	RETRACTED LENGTH ("L3")	CUSTOMER Accepted ("L2")	CUT LENGTH "L1"
520-26-4400-WH-0005F	A	White	W-103 LIGHT	330 ± 30	5.0FT-5.75FT	2300-2400
520-26-4400-WH-0007F	B	White	W-103 LIGHT	470 ± 30	7.0FT-8.05FT	3000-3200
520-26-4400-WH-0010F	C	White	W-103 LIGHT	630 ± 50	10.0FT-11.5FT	4300-4500
520-26-4400-WH-0012F	D	White	W-103 LIGHT	800 ± 50	12.0FT-13.8FT	5200-5400
520-26-4400-WH-0014F	E	White	W-103 LIGHT	850 ± 50	14.0FT-16.1FT	5800-6000
520-26-4400-WH-0025F	F	White	W-103 LIGHT	1900 ± 50	25.0FT-28.75FT	10800-11000

REVISE	VERSION	BASIS	CONTENTS
12-02-17	A/0	T0210A	NEW DRAWING

CnC Tech, LLC
Industrial Cable and Connector Technology

IDRAWING NO: 671-300		CUSTOMER: L-671
ITEM NO: 4C COILD CORD P+P PLUG		UNIT: mm
DATE: 2012-02-17		ISSUE: (A/0)
DRAWN:	QE:	QA:
SALES DEPT:	SALES MANAGER:	