DRAWING MADE IN AMERICAN PROJECTION

TOOL NUMBER	EXTRACTS	TERMINAL NUMBER	FROM	HOUSING NUMBER
274185-1		62131		360033-1
				360050-1

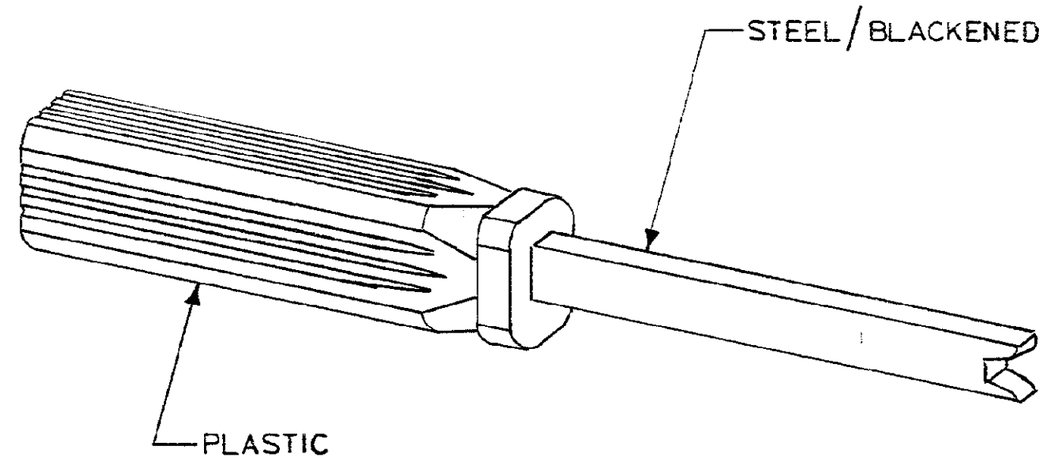

REF. P72-7733

DIMENSIONS IN INCHES. DO NOT SCALE PRINT.

PRINT DIST A

LTR	REVISION RECORD	DR	CHK	DATE

NUMBER 274185

~~REQUIRED PER ASSEMBLY~~

DESCRIPTION

DWG SIZE	~~NUMBER~~	~~NAME~~	~~REMARKS~~	~~ITEM NO~~

© 1975 BY AMP INCORPORATED. ALL RIGHTS RESERVED.
AMP PRODUCTS COVERED BY PATENTS AND/OR PATENTS PENDING.

CUSTOMER COPY REFERENCE ONLY

DR WMK 5/12/75

CHK

DE W.M. KISSINGER 1/10/75

APP

MATERIAL AND FINISH: SEE NOTES

WIRE - RANGE - INSULATION

TOLERANCE EXCEPT AS NOTED ±.015 ±1° 0'

SCALE N.T.S.

AMP INCORPORATED HARRISBURG, PENNA.

CLASS CLUSTER PIN

TYPE RECEPTACLE

LOC B NO 274185 REV 0

NAME TOOL, EXTRACTION

AMP 1253 REV 11/65