NOTES:

1. MATERIALS AND FINISHES:
   - BODY - BRASS, NICKEL PLATING
   - CONTACT PIN - PHOSPHOR BRONZE, GOLD PLATING
   - INSULATORS - PTFE, NATURAL
   - LOCK RING - BRASS, NICKEL PLATING
   - FERRULE - BRASS, NICKEL PLATING

2. ELECTRICAL:
   - A. IMPEDANCE: 75 OHM
   - B. FREQUENCY RANGE: DC - 12 GHz
   - C. RETURN LOSS (VSWR): -20dB (1.2) DC-6GHz
     -15dB (1.43) 6-12GHz
   - D. DIELECTRIC WITHSTANDING VOLTAGE: 1500 VRMS, MIN.

3. MECHANICAL:
   - A. DURABILITY: 500 CYCLES MIN.
   - B. TEMPERATURE RANGE: -65°C TO +165°C

4. CABLE ASSEMBLY INSTRUCTIONS
   - A. TRIM CABLE AS SHOWN
   - B. SLIDE INSULATOR DISC ONTO CABLE CENTER CONDUCTOR
   - C. CRIMP CONTACT TO CABLE CENTER CONDUCTOR WITH A .068" HEX DIE
   - D. CRIMP FERRULE WITH .324" HEX DIE

5 SHOWS CABLE ENTRY DIMENSIONS

6. PACKAGING:
   - A. QUANTITY: SINGLE PACK
   - B. BAG TO BE MARKED: AMPHENOL RF
     31-70539-12G
     YYWW

THIRD ANGLE PROJ.

REVISIONS				
REV	DESCRIPTION	DATE	ECO	APPR
A	RELEASE TO MFG.	19-Mar-18	7384	RM

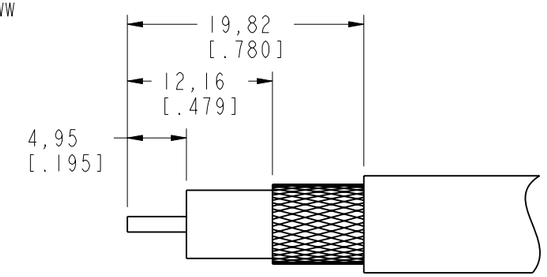

RECOMMENDED CABLE STRIPPING DIMENSIONS

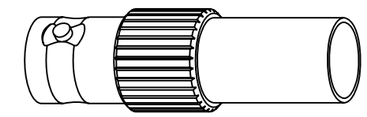

SCALE 1.500

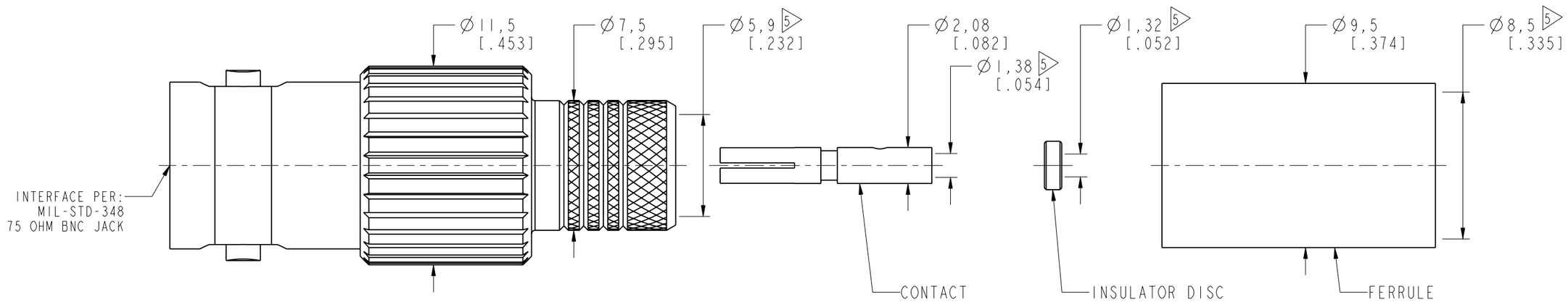

CUSTOMER OUTLINE DRAWING

ALL OTHER SHEETS ARE FOR INTERNAL USE ONLY

UNLESS OTHERWISE SPECIFIED, DIMENSIONS ARE IN METRIC AND TOLERANCES ARE:				
<0.5mm	0.5 - 6mm	6 - 30mm	30 - 120mm	ANGLES
± 0.05mm	±0.1mm	±0.2mm	± 0.3mm	±1°

NOTICE - These drawings, specifications, or other data (1) are, and remain the property of Amphenol corp. (2) must be returned upon request; and (3) are confidential and not to be disclosed to any person other than those to whom they are given by Amphenol Corp. the furnishing of these drawings, specifications, or other data by Amphenol Corp., or to any other person to anyone for any purpose is not to be regarded by implication or otherwise in any manner licensing, granting rights to permitting such holder or any other person to manufacture, use or sell any product, process or design, patented or otherwise, that may in any way be related to or disclosed by said drawings, specifications, or other data.

MATERIAL	DRAWN	DATE	TITLE
SEE NOTES	B. GREENBAUM	03-Apr-17	BNC CRIMP JACK FOR BELDEN 4794R CABLE
REFERENCE	ENGINEER	DATE	
EAR# 7803	B. GREENBAUM	03-Apr-17	
REF:	APPROVED	DATE	
CONFIGURATION LEVEL: In Work	CAD FILE		SCALE: 4.0:1.0 SHEET 2 OF 2
FINISH			DWG SIZE B / REV A

Amphenol RF

www.amphenolrf.com

DRAWING NO.	31-70539-12G
ITEM NO.	31-70539-12G
PART NO.	31-70539-12G