REV	ECN NO	REVISIONS	DRN	CKD	APP	DATE
A	——	NEW RELEASE	AJF	KLJ	NO	10-28-10

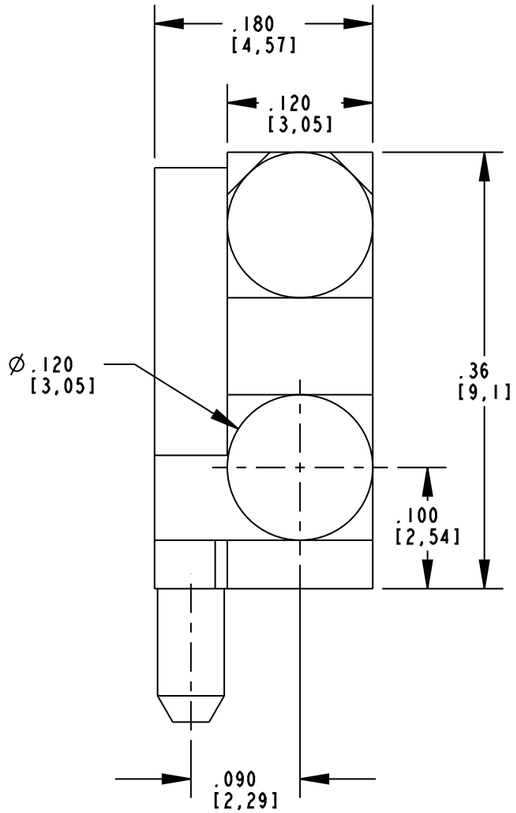

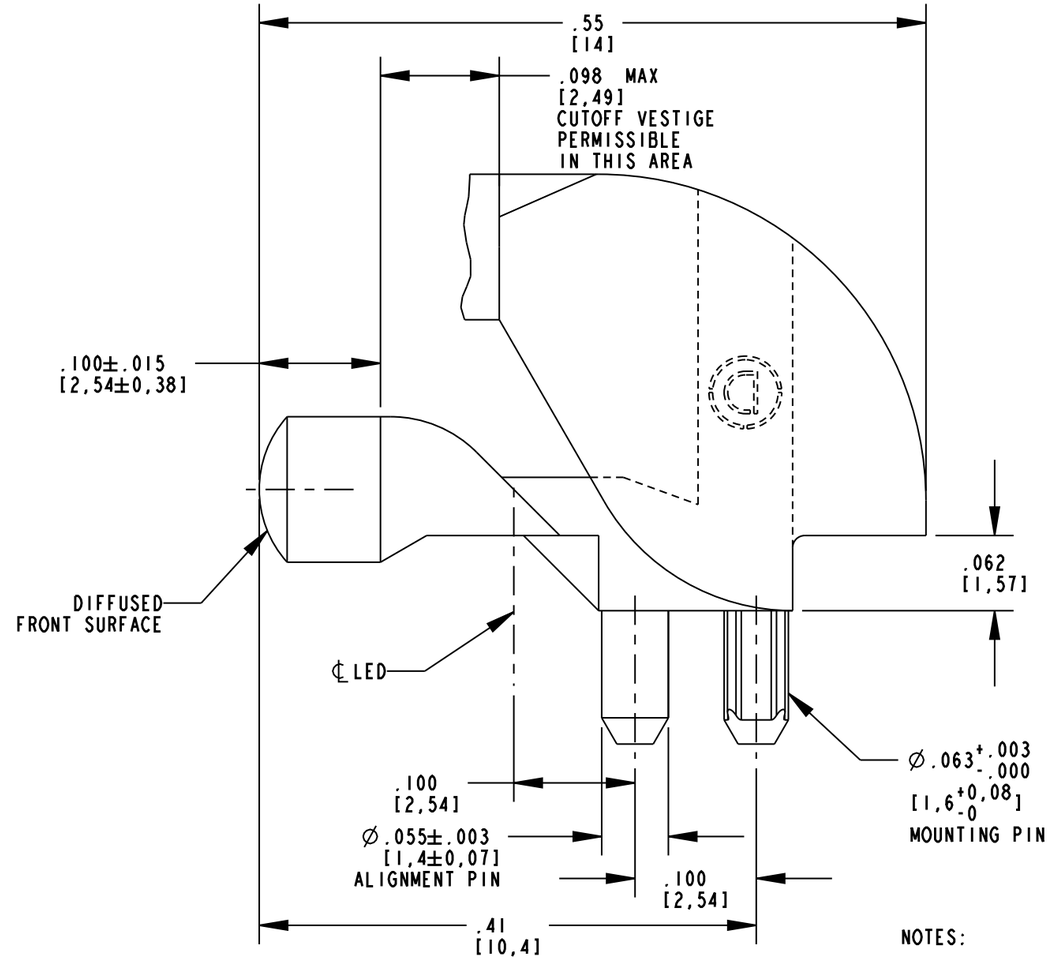

RoHS COMPLIANT 515-1061-801F

Part Numbers with the "F" suffix ending are RoHS Compliant. Packaging is marked with "RoHS Compliant" label or equivalent markings.

NOTES:

1. DIALIGHT PART NUMBER: 515-1061-801F.
2. COMPONENTS DESIGNED TO BE PRESSED INTO PCB.
3. MATERIAL TO BE CLEAR, TRANSMISSIVE POLYCARBONATE (UL 94V-0 FLAMMABILITY).
4. STORAGE AND OPERATING TEMPERATURE: -30 TO +100°C.
5. RECOMMENDED SURFACE MOUNT LEDS DIALIGHT PART NUMBERS:
   597-3XX1-50XF (SINGLE COLOR)
   597-77X1-50XF (BI-COLOR)

RECOMMENDED SOLDER PAD LAYOUT & HOLE PATTERN GAUGE

(TOLERANCES: ±.002")
SCALE:6.000

BI-COLOR LED

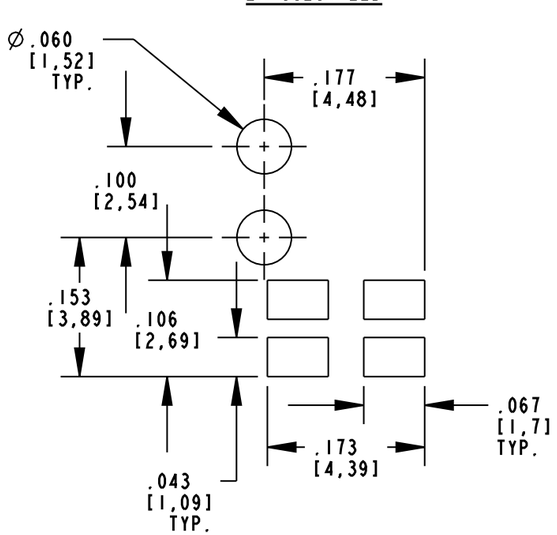

SINGLE COLOR LED

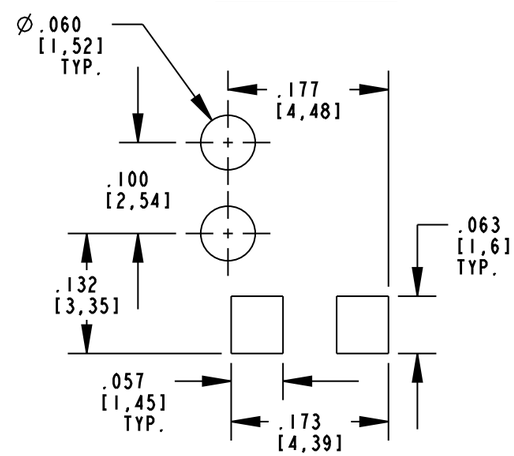

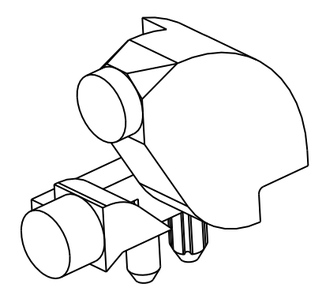

SCALE 4.000

THIS DRAWING AND THE CONTENTS HEREIN ARE CONFIDENTIAL AND THE SOLE PROPERTY OF DIALIGHT. REPRODUCTION OF THIS DRAWING OR CONSTRUCTION OF ANY PARTS WITHIN THIS DRAWING ARE FORBIDDEN WITHOUT THE WRITTEN CONSENT OF DIALIGHT.

SCALE: 8.000
ALL DIM'S IN: INCHES (MM)
TOLERANCES: UNLESS OTHERWISE SPECIFIED
FRACTIONS: ±1/64
DECIMALS (.XX): ±.02
DECIMALS (.XXX): ±.015
ANGLES: ±1°
FINISH:

DRAWING NUMBER: C-17875
REV: A
TITLE: BI-LEVEL LIGHT PIPE
MATERIAL:

Dialight
1501 ROUTE 34 SOUTH
FARMINGDALE, NJ 07727

FSCM 83330
SHEET 1 OF 1
FAMILY TABLE: