Ratings
Temperature: -25~80 °C
Flammability: FT2

Twisted Pair (3PR)
Voltage: 30 V
Gauge: 24 AWG 0.2 mm²
Color: green/white, blue/white, orange/white
Conductor: tinned copper strands, ∅0.1 x 26
Conductor resistance at 20 °C: 94.2 Ω /km max
Insulation
Material: foamed PE
Diameter: ∅1.2 ± 0.1
Thickness: 0.3 mm nominal
Resistance at 20 °C: 10 MΩ /km min
Twisted pair characteristic impedance: 100 Ω

Power Wire (2C)
Voltage: 300 V
Gauge: 20 AWG 0.52 mm²
Color: red (power), black (ground)
Conductor: tinned copper strands, ∅0.127 x 41
Conductor resistance at 20 °C: 36.7 Ω /km max
Insulation
Material: SR-PVC, 90A
Diameter: ∅1.55 ±0.1
Thickness: 0.3 mm nominal
Resistance at 20 °C: 10 MΩ /km min

Power marking: E339579 UL AWM STYLE 1061 80°C 300V - - - cUL AWM I A 80°C 300V FT2 TENSILITY

Shield
Type: aluminium mylar + tinned copper braid
Stranding: Ø0.1
Coverage: 65% min braid, 100% foil

Drain
Stranding: ∅0.1 x 26
Material: tinned copper strands

Outer jacket
Material: PVC, 79A
Color: black
Style: round
Diameter: ∅7 ± 0.3
Nominal thickness: 0.8 mm

Jacket marking: E339579 UL AWM STYLE 2725 24AWG/3P+20AWG/2C 80°C 30V - - - cUL AWM I/II A 80°C 30V FT2 TENSILITY

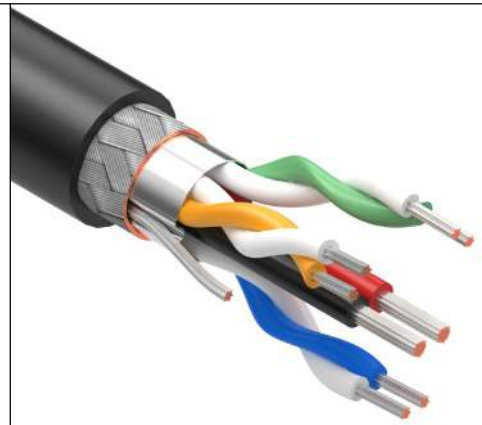

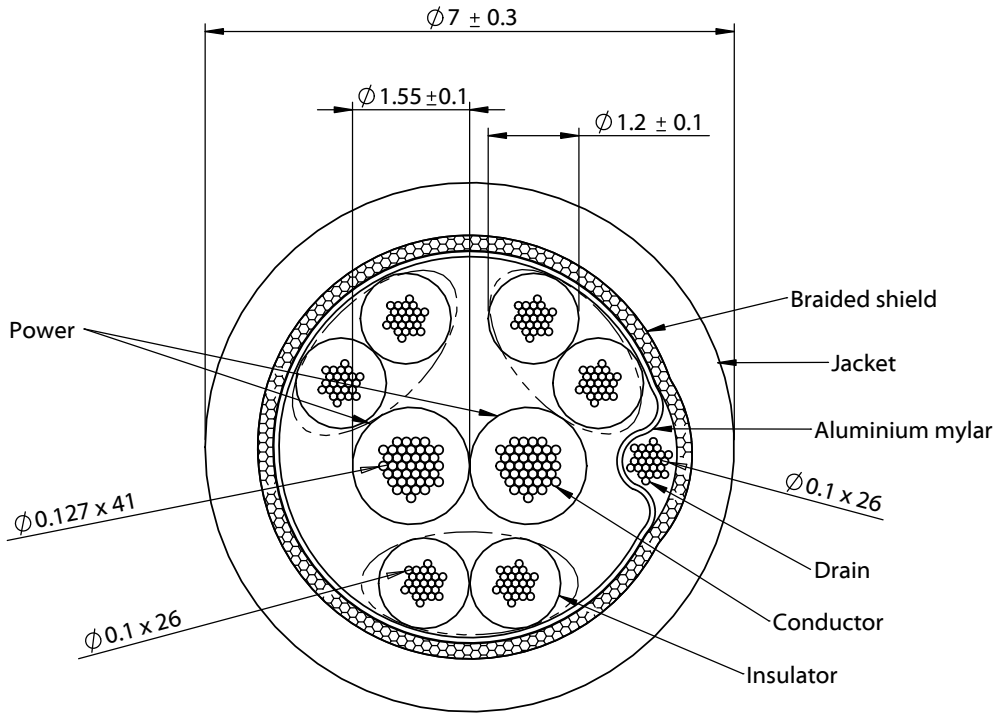

Revision:	Date:	Description:
A	2/28/22	Initial release

Prepared: JD Digitally signed by JD Date: 2023.04.25 11:20:42 -07'00'

Verified: PB Digitally signed by PB Date: 2023.04.25 12:59:12 -07'00'

Dimensions are in millimeters.
Tolerances:
X: ± 0.5 mm
X.X: ± 0.3 mm
X.XX: ± 0.05 mm

Notes:
RoHS compliant
Function test: no open, no short circuit, no intermittent

Description:
Wire, 3PR TS 24 AWG, 2C TS 20 AWG, UL2725, 30V, 80C, 7.0 mm, shielded, FT2, PVC

TENSILITY
tel 1.541.323.3228 800 877.670.7118
fax 1.541.323.4202 web tensility.com

Size: A
Part number: 30-02487
Scale: 10:1
Sheet 1 of 1

To see a custom version of this cable assembly, call Tensility at 541-323-3228 or email engineering@tensility.com

5 4 3 2 1