81665-5 ✔ ACTIVE

AMP | AMP CPC

TE Internal #: 81665-5

Flange Seal, Black, -55 – 105 °C [-67 – 221 °F] Operating Temperature, AMP CPC

View on TE.com >

Connectors > Connector Accessories > Connector Seals & Cavity Plugs > CPC Sealed Accessories

Connector Seal & Plug Type: **Flange Seal**

Primary Product Color: **Black**

Operating Temperature (Max): **105 °C [221 °F]**

Operating Temperature Range: **-55 – 105 °C [-67 – 221 °F]**

All CPC Sealed Accessories (5)

Features

Product Type Features

Connector Seal & Plug Type	Flange Seal

Body Features

Primary Product Color	Black

Usage Conditions

Operating Temperature (Max)	105 °C[221 °F]
Operating Temperature Range	-55 – 105 °C[-67 – 221 °F]

Packaging Features

Packaging Quantity	1000
Packaging Method	Box

Product Compliance

For compliance documentation, visit the product page on TE.com>

EU RoHS Directive 2011/65/EU	Compliant

EU ELV Directive 2000/53/EC	Compliant
China RoHS 2 Directive MIIT Order No 32, 2016	No Restricted Materials Above Threshold
EU REACH Regulation (EC) No. 1907/2006	Current ECHA Candidate List: JUNE 2023 (235) Candidate List Declared Against: JAN 2023 (233) Does not contain REACH SVHC
Halogen Content	Not Yet Reviewed for halogen content
Solder Process Capability	Not applicable for solder process capability

Product Compliance Disclaimer

This information is provided based on reasonable inquiry of our suppliers and represents our current actual knowledge based on the information they provided. This information is subject to change. The part numbers that TE has identified as EU RoHS compliant have a maximum concentration of 0.1% by weight in homogenous materials for lead, hexavalent chromium, mercury, PBB, PBDE, DBP, BBP, DEHP, DIBP, and 0.01% for cadmium, or qualify for an exemption to these limits as defined in the Annexes of Directive 2011/65/EU (RoHS2). Finished electrical and electronic equipment products will be CE marked as required by Directive 2011/65/EU. Components may not be CE marked. Additionally, the part numbers that TE has identified as EU ELV compliant have a maximum concentration of 0.1% by weight in homogenous materials for lead, hexavalent chromium, and mercury, and 0.01% for cadmium, or qualify for an exemption to these limits as defined in the Annexes of Directive 2000/53/EC (ELV). Regarding the REACH Regulation, the information TE provides on SVHC in articles for this part number is based on the latest European Chemicals Agency (ECHA) 'Guidance on requirements for substances in articles' posted at this URL: https://echa.europa.eu/guidance-documents/guidance-on-reach

Compatible Parts

TE Part # CAT-AM71-C83998Y
One-Piece Connector, Sealed, CPC Series 1

TE Part # CAT-AM71-C83998J
Cable/Panel Mount Connector, CPC Series 1

TE Part # 206838-3
CPC RECPT SEALED SIZE 23-24

TE Part # CAT-AM71-C83998K
Circular Connector, Environmentally Sealed, CPC Series 6

Also in the Series | AMP CPC

Circular Connector Adapters(7)

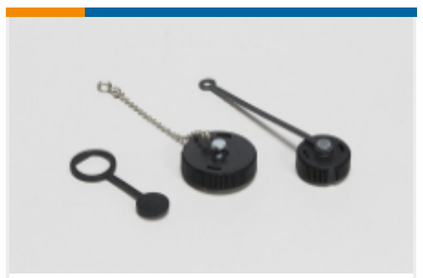

Circular Connector Caps & Covers(16)

Circular Connector Hardware(3)

Circular Connector Keying Plugs(2)

Circular Power Connectors(459)

Connector Backshells(56)

Connector Seals & Cavity Plugs(36)

Connector Strain Relief(6)

Insertion & Extraction Tools(1)

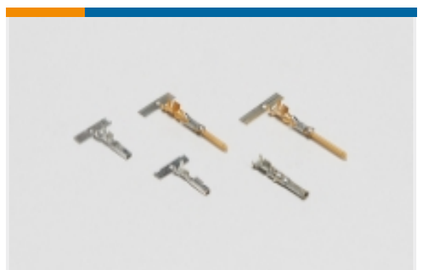

Power Contacts(6)

Sealing Sleeves(2)

Customers Also Bought

TE Part #3-1415042-1
Force Guided Relay, DIN-rail

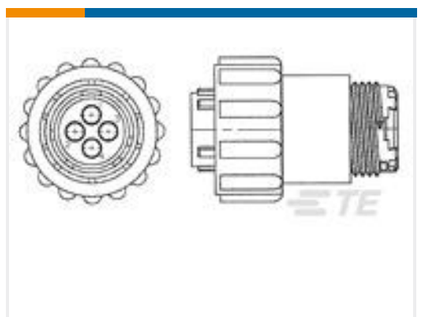

TE Part #796288-1
PLUG.ASSY,23-37STD SEX THRD AD

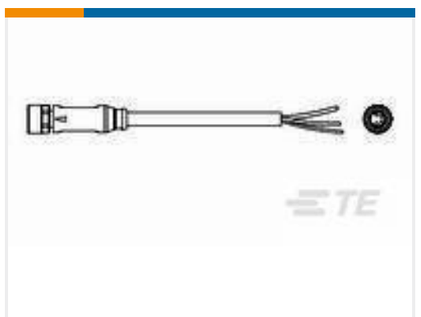

TE Part #1-2273005-1
M8 x 1.0 straight socket Pigtail Shld

TE Part #T4161120008-001
RPC-M12-MS-8CON-PUR-0.5SH

TE Part #66253-8
MALE CONTACT ASSY. (STRIP)

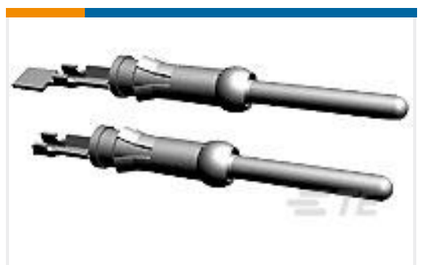

TE Part #1-66359-9
III+PIN,18-14,TIN,STRIP

TE Part #2351885-5
5POS TB HDR 180 DEG, PITCH 5.0&TL 4.5mm

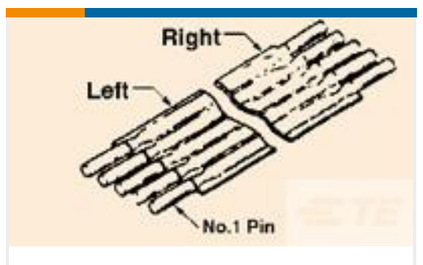

TE Part #7-1437166-1
FSP-22A-6

Documents

Product Drawings

ECONOSEAL, FLANGE GASKET

English

CAD Files

3D PDF

English

Customer View Model

ENG_CVM_81665-5_C.2d_dxf.zip

English

Customer View Model

ENG_CVM_81665-5_C.3d_igs.zip

English

Customer View Model

ENG_CVM_81665-5_C.3d_stp.zip

English

3D PDF

3D

Customer View Model

ENG_CVM_CVM_81665-5_E.2d_dxf.zip

English

Customer View Model

ENG_CVM_CVM_81665-5_E.3d_igs.zip

English

Customer View Model

ENG_CVM_CVM_81665-5_E.3d_stp.zip

English

By downloading the CAD file I accept and agree to the Terms and Conditions of use.

Datasheets & Catalog Pages

AMP Circular Connectors for Commercial Signal & Power Applications

English

Product Specifications

Application Specification

English

Product Environmental Compliance

MD_81665-5_103120171038_dmtec

English

MD_81665-5_103120171038_dmtec

English

Instruction Sheets

Instruction Sheet (U.S.)

English