ITEM NO.	PART NUMBER	DESCRIPTION	QTY.	NOTES
1	TLY-13	NEMA 5-15P	1	black overmold
2	30-00244	3C, 18 AWG, UL SVT, 300V, 105°C, 6.3 mm, VW-1, PVC	1	terminates to stripped and tinned

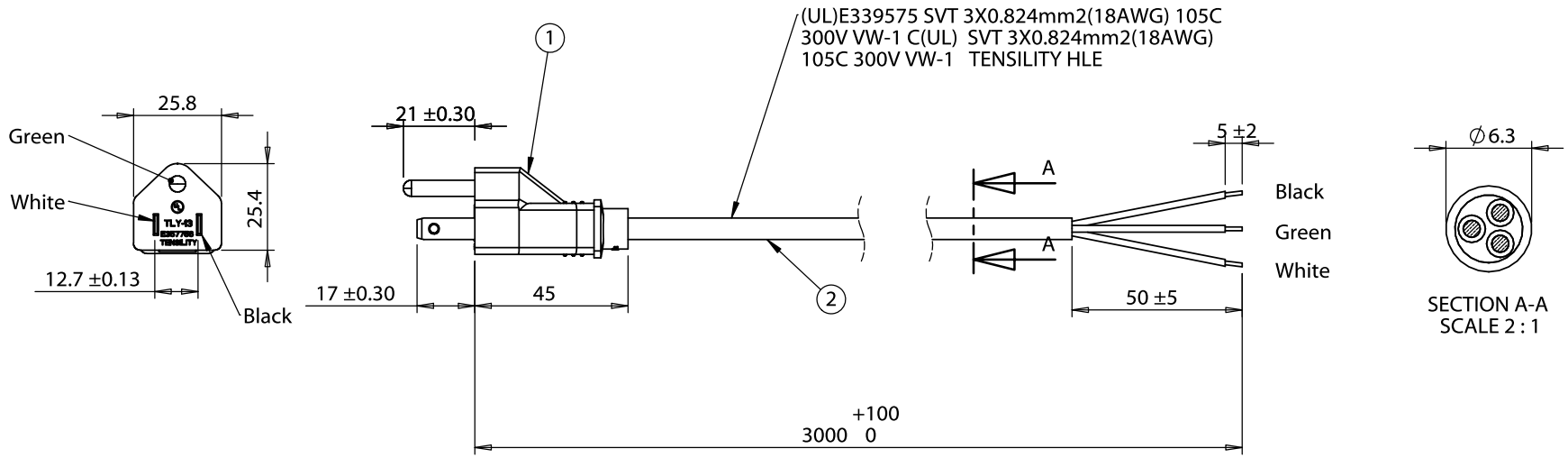

Revision	Date	Description
A	8/27/2014	Initial release

Prepared by:
AG
2014.10.22 13:12:12 -07'00'

Verified by:
JM
2014.10.22 13:21:58 -07'00'

DIMENSIONS ARE IN MILLIMETERS

TOLERANCES:
X: ± 0.5 mm
X.X: ± 0.3 mm
X.XX: ± 0.05 mm

Notes:
Rated for 10 A at 125 Vac as is.

RoHS compliant

Function test: no open, no reversed polarity, no short circuit, no INT

Description:
Ac cord, 3000 mm, U.S, NEMA 5-15P plug, TLY-13 to tinned, 18 AWG, SVT wire, 30-00244

TENSILITY
20802 Sockeye Place #130
Bend, OR 97701 USA
tel 541.323.3228 *fax* 541.323.4202
800 877.670.7118 www.tensility.com

SIZE	Part number	
A	**11-00076**	
SCALE: 1:2	WEIGHT:	SHEET 1 OF 1

5 4 3 2 1