THIS DRAWING IS UNPUBLISHED. RELEASED FOR PUBLICATION 20
© COPYRIGHT 20 BY - ALL RIGHTS RESERVED.

LOC	DIST
F	00

REVISIONS

P	LTR	DESCRIPTION	DATE	DWN	APVD
	J	0-1379684-7 AVAILABLE FOR ALL CUSTOMER	29APR2013	RC	JL

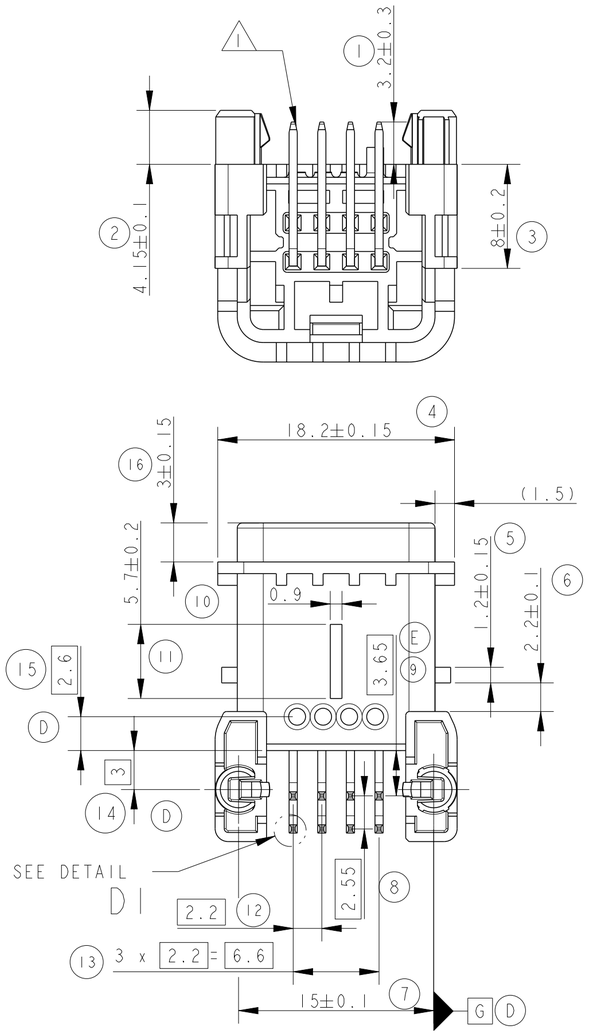

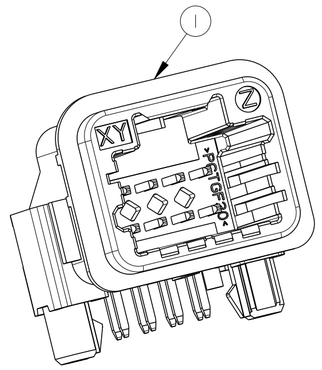

SCALE 3:1

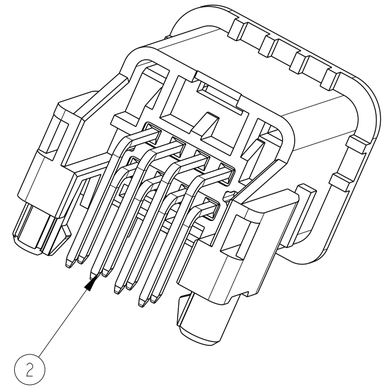

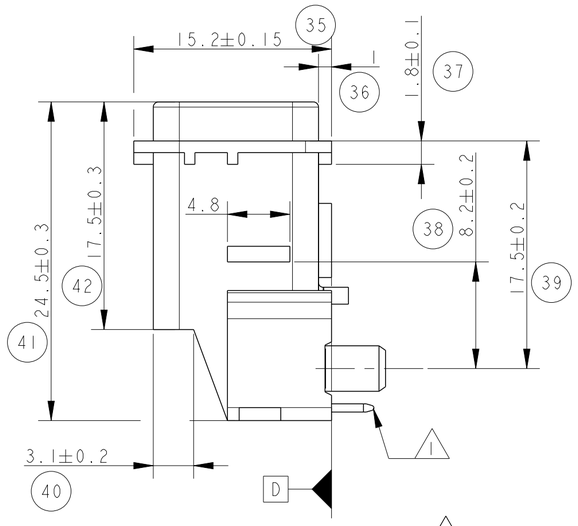

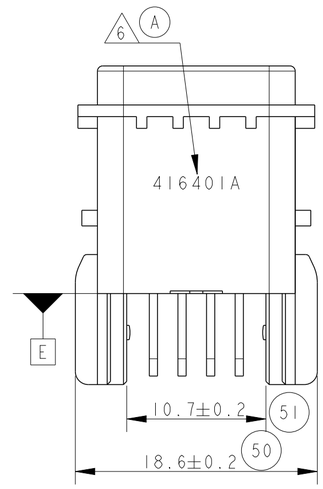

EPAISSEUR /THICKNESS PCB: 1.6±10%

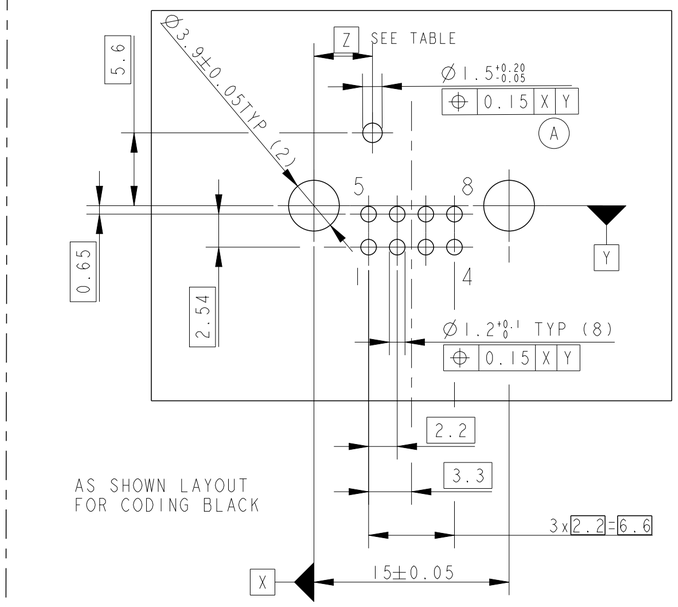

AS SHOWN LAYOUT
FOR CODING BLACK

SCALE 2:1

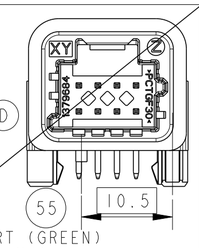

Z=10.5
CODAGE (CODING): 4
COULEUR (COLOR): VERT (GREEN)
STICK :N/A
REINFORCED TRAY :
PLATEAU RENFORCE (8) :N/A
STANDARD TRAY :
PLATEAU STANDARD :N/A

SCALE 2:1

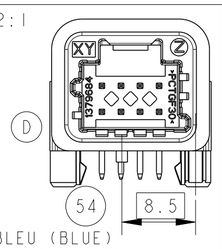

Z=8.5
CODAGE (CODING):3
COULEUR (COLOR): BLEU (BLUE)
STICK :0-1379684-6
REINFORCED TRAY :
PLATEAU RENFORCE (8) :0-1379684-3
STANDARD TRAY :
PLATEAU STANDARD :0-1379684-7

SCALE 2:1

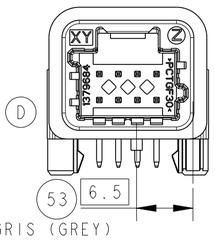

Z=6.5
CODAGE (CODING):2
COULEUR (COLOR): GRIS (GREY)
STICK :0-1379684-5
REINFORCED TRAY :
PLATEAU RENFORCE (8) :0-1379684-2
STANDARD TRAY :
PLATEAU STANDARD :N/A

SCALE 2:1

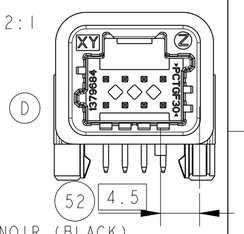

Z=4.5
CODAGE (CODING):1
COULEUR (COLOR): NOIR (BLACK)
STICK :0-1379684-4
REINFORCED TRAY :
PLATEAU RENFORCE (8) :1-1379684-1
STANDARD TRAY :
PLATEAU STANDARD :0-1379684-1

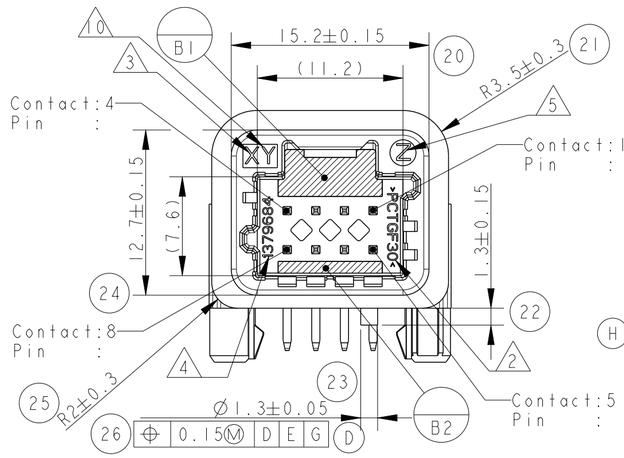

DETAIL D1
SCALE 20:1

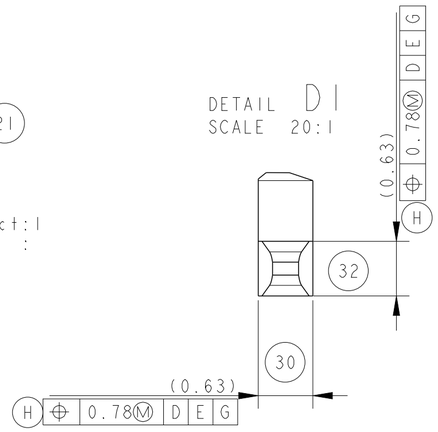

1 PRE ETAME :1-3µm Sn sur 1.3-2.2µm Ni
PRE-TIN :

2 REFERENCE MATIERE
MATERIAL REFERENCE

3 NUMERO D'EMPREINTE
CAVITY NUMBER

4 REFERENCE TE (ASSEMBLAGE)

5 INDICE DE REVISION
PLASTIC PART REVISION

6 DATE D'ASSEMBLAGE A-SS-J-L-E-R
Année - semaine - jour - ligne - equipe - rev PRC
(J) DATE CODE ASSY Y-WW-D-L-S-R
Year - Week - Day - Line - Shift - rev PRC

7. SOUDABILITE SUIVANT NORME FRANCAISE NF-A-89 400
SOUDABILITY ACCORDING STANDARD FRENCH

8 PLATEAU ESD SUIVANT NORME :IEC - 61340-5-1
R plateau 10E9Ω-10E12Ω
TRAY ESD ACCORDIND TO : IEC-61340-5-1
R tray 10E9Ω-10E12Ω

(J) 9. CONDITIONNEMENT SUIVANT SPEC :107-15644 /107-15645
PACKAGING ACCORDING SPEC :

(D) 10 NUMERO DE MOULE
NUMBER OF THE MOULD

EN ACCORD AVEC LA SPEC D'INTERFACE:
REN 8200 311 959 SAUF AUTRE SPECIFICATION
ACCORDING TO INTERFACE
REN 8200 311 959 EXCEPTED OTHER SPECIFICATION

N°	QTE		DESCRIPTION	MATIERE MATERIAL	FINITION FINISH
2	8	8	BROCHE TH PIN TH	CuSn6	PRE ETAME PRE TIN
1	1	1	BOITIER 8V 025 HOUSING 8POS 025	PCTGF30	-

THIS DRAWING IS A CONTROLLED DOCUMENT.

DIMENSIONS: mm

TOLERANCES UNLESS OTHERWISE SPECIFIED: ±- ±- ±0.30 ±- ±-

MATERIAL -

FINISH -

DWN R.CHARLES 22-SEP-04
CHK D. REIFEL 22-SEP-04
APVD J. LALANGE 01-OCT-04
PRODUCT SPEC 108-15383
APPLICATION SPEC -
WEIGHT 3.3g

TE Connectivity

NAME EMBASE 8 VOIES 025 COUDEE
-
025 8W RIGHT ANGLE HEADER

SIZE A2 | CAGE CODE 00779 | DRAWING NO C-1379684 | RESTRICTED TO -

CUSTOMER DRAWING | SCALE 3:1 | SHEET 1 OF 1 | REV J

1471-9 (3/11)