36 Terminal
Fixed Terminals

TECHNICAL INFORMATION

Electrical:
10A, 300V, 22-14AWG
Materials:
Housing - PA-GF
Front Plate - PBT
Terminals - PA
Temperature Range:
Up to 120°C (248°F)
Flammability Rating:
UL94 V-O

***Color:** Black Housing
Gray Cover Plate
Terminal Type:
Fixed Screw
Terminal Screw Size: M2.5
Recommended Torque:
0.5Nm
Max. PCB's:
(2) Vertical
Mounting:
35mm DIN Rail

ORDERING INFORMATION

Part Number	Type	Terminals	PCB Connection
90.150	KS4461/F	Fixed Screw	Machine Solder

ACCESSORIES

Accessories	Part Number	Type
1 Meter DIN Rail	2511120/1M	TS35x7.5/1M
Terminal Blanking Plug	90.190	KS4403-5-1
Light Pipes, 3mm Grid	90.191	KS4400-7-1
Light Pipes, 5mm Grid	90.192	KS4400-6-1

ENCLOSURE DRAWING (To convert to inches divide by 25.4.)

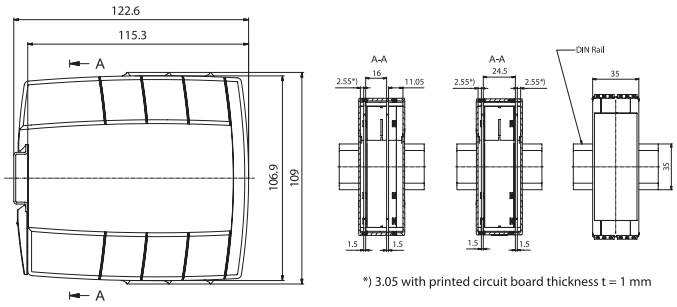

PCB DRAWING (To convert to inches divide by 25.4.)

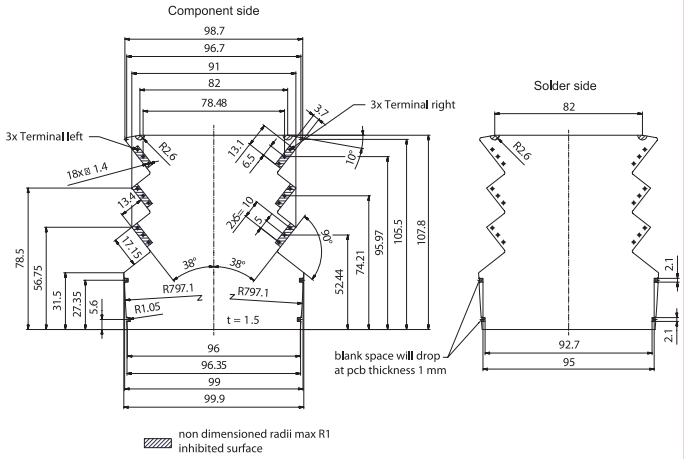

*Other colors are available upon request.

36 Terminal
Pluggabe Terminals

TECHNICAL INFORMATION

Electrical:
10A, 300V, 30-12AWG (Screw);
10A, 300V, 26-12AWG (Spring)
Materials:
Housing - PA-GF
Front Plate - PBT
Terminals - PA
Temperature Range:
Up to 120°C (248°F)
Flammability Rating:
UL94 V-O

***Color:** Black Housing
Gray Cover Plate
Terminal Type:
Pluggable Screw /
Pluggable Spring
Terminal Screw Size: M2.5
Recommended Torque:
0.5Nm
Max. PCB's:
(2) Vertical
Mounting:
35mm DIN Rail

ORDERING INFORMATION

Part Number	Type	Terminals	PCB Connection
90.151	KS4461/PS	Pluggable Screw	Machine Solder
90.152	KS4461/PC	Pluggable Spring	Machine Solder

ACCESSORIES

Accessories	Part Number	Type
1 Meter DIN Rail	2511120/1M	TS35x7.5/1M
Terminal Blanking Plug	90.190	KS4403-5-1
Light Pipes, 3mm Grid	90.191	KS4400-7-1
Light Pipes, 5mm Grid	90.192	KS4400-6-1

ENCLOSURE DRAWING (To convert to inches divide by 25.4.)

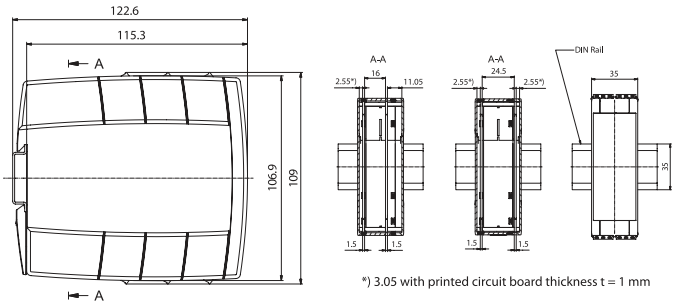
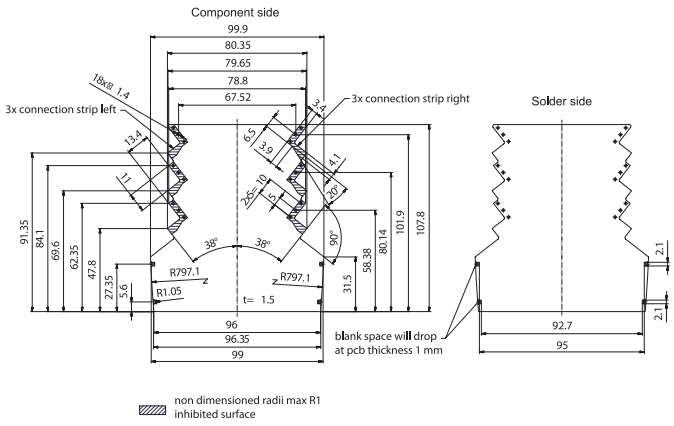
PCB DRAWING (To convert to inches divide by 25.4.)