© – TE Connectivity. All Rights Reserved.

REVISIONS					
P	LTR	DESCRIPTION	DATE	DBN	APVD
	L2	REVISED PER ECO-20-000170	21MAY2020	KR	JO

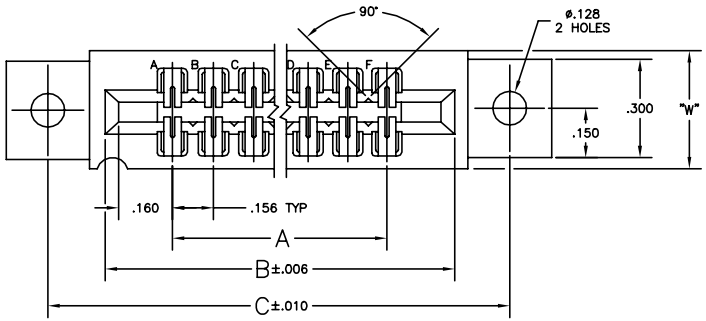

1. .000015 MIN GOLD OVER .000050 MIN. NICKEL IN CONTACT AREA.
2. .000030 MIN GOLD OVER .000050 MIN. NICKEL IN CONTACT AREA.
3. ALL PARTS ASSEMBLED IN MEXICO MUST BE STAMPED "ASSY IN MEXICO" THE WORD "MEXICO" CAN BE SUBSTITUTED ONLY WHERE PART SIZE PROHIBITS STAMPING "ASSY IN MEXICO", INK STAMP COLOR WHITE OR HOT STAMP (NO WHITE TAPE) PER 115-9009, APPROX WHERE SHOWN, SIDE OPTIONAL.
4. MATTE TIN PLATED CONTACT TAILS.
5. OBSOLETE PARTS: OBSOLETE CIS STREAMLINING PER D.RENAUD/D.SINISI

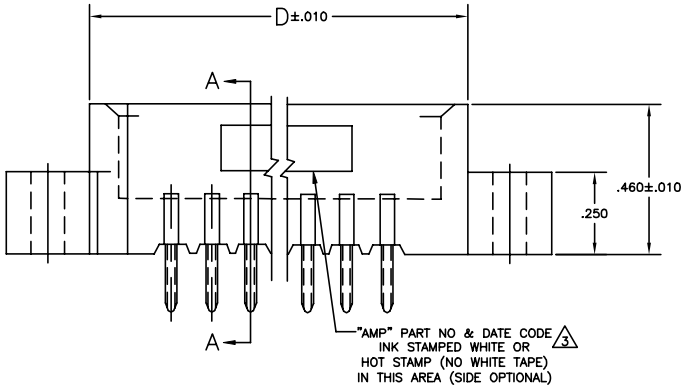

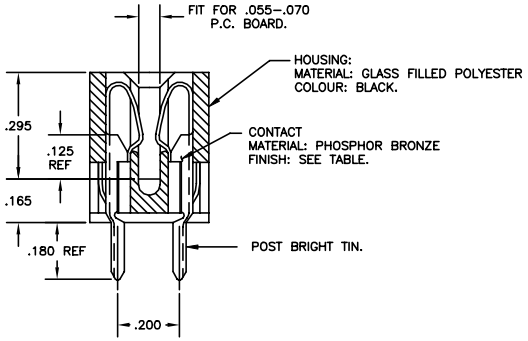

SECTION A–A

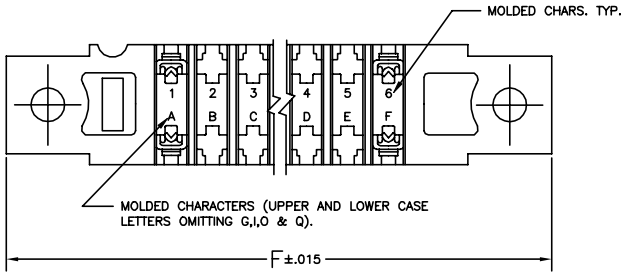

	1 PART NO	NO.OF. POSITION	A	B	C	D	W	F	2 PART NO
	4 –	43	6.552	6.872	7.307	7.012	.437	7.557	8-530656-3
5 4	OBSOLETE –	28	4.212	4.532	4.967	4.672	.370	5.217	8-530656-2
5 4	OBSOLETE –	25	3.744	4.064	4.499	4.204	.370	4.749	7-530656-8
	4 –	22	3.276	3.596	4.031	3.736	.370	4.281	7-530656-6
5 4	OBSOLETE –	10	1.404	1.724	2.159	1.864	.370	2.409	7-530656-2
	~~1-530656-3~~	43	6.552	6.872	7.307	7.012	.437	7.557	3-530656-3
	~~1-530656-2~~	28	4.212	4.532	4.967	4.672	.370	5.217	3-530656-2
	~~1-530656-1~~	~~44~~	~~6.708~~	~~7.028~~	~~7.463~~	~~7.168~~	~~.437~~	~~7.713~~	~~3-530656-1~~
	~~1-530656-0~~	36	5.460	5.780	6.215	5.920	.437	6.465	~~3-530656-0~~
	~~530656-9~~	30	4.524	4.844	5.279	4.984	.437	5.529	~~2-530656-9~~
	~~530656-8~~	25	3.744	4.064	4.499	4.204	.370	4.749	5 2-530656-8
OBSOLETE	~~530656-7~~	~~34~~	~~3.588~~	~~3.908~~	~~4.343~~	~~4.048~~	~~.370~~	~~4.593~~	~~2-530656-7~~
	~~530656-6~~	22	3.276	3.596	4.031	3.736	.370	4.281	2-530656-6
	~~530656-5~~	~~18~~	~~2.652~~	~~2.972~~	~~3.407~~	~~3.112~~	~~.370~~	~~3.657~~	~~2-530656-5~~
	~~530656-4~~	~~15~~	~~2.184~~	~~2.504~~	~~2.939~~	~~2.644~~	~~.370~~	~~3.189~~	~~2-530656-4~~
	~~530656-3~~	~~12~~	~~1.716~~	~~2.036~~	~~2.471~~	~~2.176~~	~~.370~~	~~2.721~~	~~2-530656-3~~
	~~530656-2~~	10	1.404	1.724	2.159	1.864	.370	2.409	5 2-530656-2
	~~530656-1~~	~~6~~	~~.780~~	~~1.100~~	~~1.535~~	~~1.240~~	~~.370~~	~~1.785~~	~~2-530656-1~~

THIS DRAWING IS A CONTROLLED DOCUMENT.

DIMENSIONS: INCHES

TOLERANCES UNLESS OTHERWISE SPECIFIED: 0 PLC ± – ; 1 PLC ± – ; 2 PLC ± – ; 3 PLC ± .005 ; 4 PLC ± – ; ANGLES ± –

MATERIAL: SEE CALL-OUT

FINISH: SEE CALL-OUT

DBN	–	19MAR76
CHK	–	20MAR75
APVD	–	20MAR75
PRODUCT SPEC	–	
APPLICATION SPEC	–	
WEIGHT	0.000000	

TE Connectivity

NAME: HOUSING ASSY, LOW PROFILE, EDGE CONNECTOR, FLOW SOLDER, FOR .052 DIA. HOLE .156X.200 CTRS.

SIZE	CAGE CODE	DRAWING NO	RESTRICTED TO
A1	00779	C-530656	–

CUSTOMER DRAWING | SCALE 4:1 | SHEET 1 OF 1 | REV L2

4605 (1/10)