THIS DRAWING IS UNPUBLISHED. RELEASED FOR PUBLICATION - ,- .
© COPYRIGHT - BY TYCO ELECTRONICS CORPORATION. ALL RIGHTS RESERVED.

LOC	DIST
AD	00

REVISIONS

P	LTR	DESCRIPTION	DATE	DWN	APVD
	H	EC 0G3C 0209 05	27APR05	BSV	JLG
	H1	REVISED PER ECO-09-021826	6JAN10	KK	AEG

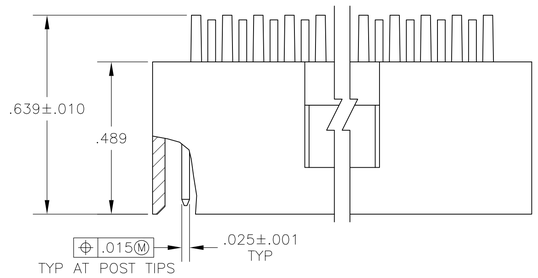

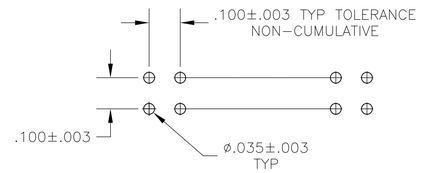

RECOMMENDED HOLE LAYOUT

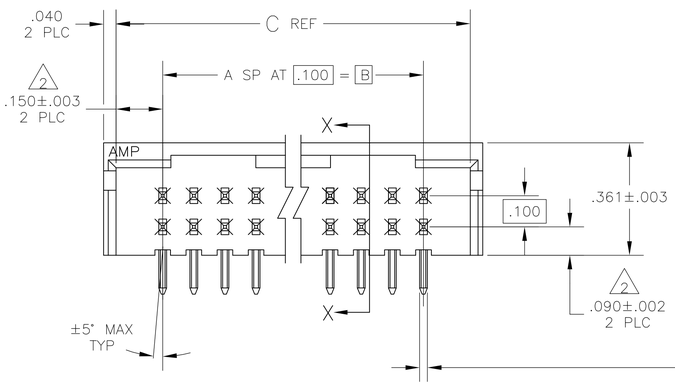

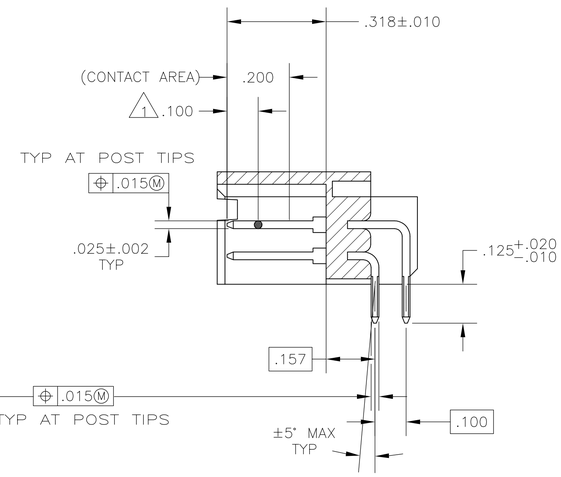

SECTION X—X

1. POINT OF MEASUREMENT FOR PLATING THICKNESS.
2. THE NOTED DIMENSION APPLIES AT THE INTERSECTION OF THE POST AND HOUSING
3. OBSOLETE PART NUMBERS
4. POSTS: .000030 GOLD IN CONTACT AREA, .000100–.000200 MATTE TIN–LEAD ON SOLDER TAIL, ALL OVER .000050 NICKEL
5. POSTS: .000030 GOLD IN CONTACT AREA, .000100–.000200 MATTE TIN ON SOLDER TAIL, ALL OVER .000050 NICKEL
6. OBSOLETE PARTS: OBSOLETE CIS STREAMLINING PER D.RENAUD/D.SINISI

6 OBSOLETE	5	3.200	2.900	29	60	7-103165-6
6 OBSOLETE	5	2.700	2.400	24	50	7-103165-1
	5	2.200	1.900	19	40	6-103165-6
6 OBSOLETE	5	1.900	1.600	16	34	6-103165-3
6 OBSOLETE	5	1.700	1.400	14	30	6-103165-1
	5	1.500	1.200	12	26	5-103165-9
	5	1.400	1.100	11	24	5-103165-8
	5	1.200	.900	9	20	5-103165-6
6 OBSOLETE	5	1.100	.800	8	18	5-103165-5
	5	1.000	.700	7	16	5-103165-4
	5	.900	.600	6	14	5-103165-3
6 OBSOLETE	5	.800	.500	5	12	5-103165-2
6 OBSOLETE	5	.700	.400	4	10	5-103165-1
3 OBSOLETE	4	3.800	3.500	35	72	3-103165-2
3 OBSOLETE	4	3.700	3.400	34	70	3-103165-1
3 OBSOLETE	4	3.600	3.300	33	68	3-103165-0
3 OBSOLETE	4	3.500	3.200	32	66	2-103165-9
3 OBSOLETE	4	3.400	3.100	31	64	2-103165-8
3 OBSOLETE	4	3.300	3.000	30	62	2-103165-7
6 OBSOLETE	4	3.200	2.900	29	60	2-103165-6
3 OBSOLETE	4	3.100	2.800	28	58	2-103165-5
3 OBSOLETE	4	3.000	2.700	27	56	2-103165-4
3 OBSOLETE	4	2.900	2.600	26	54	2-103165-3
3 OBSOLETE	4	2.800	2.500	25	52	2-103165-2
	4	2.700	2.400	24	50	2-103165-1
3 OBSOLETE	4	2.600	2.300	23	48	2-103165-0
3 OBSOLETE	4	2.500	2.200	22	46	1-103165-9
3 OBSOLETE	4	2.400	2.100	21	44	1-103165-8
3 OBSOLETE	4	2.300	2.000	20	42	1-103165-7
	4	2.200	1.900	19	40	1-103165-6
3 OBSOLETE	4	2.100	1.800	18	38	1-103165-5
3 OBSOLETE	4	2.000	1.700	17	36	1-103165-4
6 OBSOLETE	4	1.900	1.600	16	34	1-103165-3
3 OBSOLETE	4	1.800	1.500	15	32	1-103165-2
	4	1.700	1.400	14	30	1-103165-1
3 OBSOLETE	4	1.600	1.300	13	28	1-103165-0
	4	1.500	1.200	12	26	103165-9
	4	1.400	1.100	11	24	103165-8
3 OBSOLETE	4	1.300	1.000	10	22	103165-7
	4	1.200	.900	9	20	103165-6
6 OBSOLETE	4	1.100	.800	8	18	103165-5
	4	1.000	.700	7	16	103165-4
	4	.900	.600	6	14	103165-3
6 OBSOLETE	4	.800	.500	5	12	103165-2
	4	.700	.400	4	10	103165-1
	PLATING	C	B	A	NO OF POSN	PART NUMBER

THIS DRAWING IS A CONTROLLED DOCUMENT.

DIMENSIONS: INCHES

TOLERANCES UNLESS OTHERWISE SPECIFIED:
0 PLC ± –
1 PLC ± –
2 PLC ± –
3 PLC ± .005
4 PLC ± –
ANGLES ± –

MATERIAL: HOUSING: FLAME RETARDANT THERMOPLASTIC; COLOR : BLACK
POST:PHOS BRONZE

FINISH: SEE TABLE

DWN H MOLL 16NOV87
CHK R. FIEDT 16NOV87
APVD R FIEDT 16NOV87
PRODUCT SPEC —
APPLICATION SPEC —
WEIGHT —

Tyco Electronics
Tyco Electronics Corporation
Harrisburg, Pa 17105-3608

NAME: HEADER ASSY, MOD II, DBL ROW, .100X.100 C/L, RIGHT ANGLE, (3) SIDED SHROUD

SIZE A1 | CAGE CODE 00779 | DRAWING NO C-103165 | RESTRICTED TO —

CUSTOMER DRAWING | SCALE 4:1 | SHEET 1 OF 1 | REV H1