NOTES:
1- MATERIAL :
HOUSING :-LCP GLASS FILLED UL 94V0, COLOUR: BLACK
TERMINAL:-BRASS PLATED WITH:
PLATING 2: 0.00127 MIN GOLD IN CONTACT AREA, 0.00190 MIN PURE TIN IN TAIL AREA, BOTH OVER 0.00127 MIN NICKEL OVERALL.
PLATING 7: 0.00005 MIN GOLD FLASH OVER, 0.0006 MIN PALLADIUM-NICKEL IN CONTACT AREA, 0.00190 MIN PURE TIN IN TAIL AREA, BOTH OVER 0.00127 MIN NICKEL OVERALL.
SHIELD: BRASS PLATED WITH 0.0020 MIN TIN.
2- P.C. BOARD THICKNESS: 1.57±0.15
3- JACK FOR MATING WITH F.C.C. 68 PLUGS
4- PRODUCT SPECIFICATION: PS-95540-002
5- PACKAGING SPECIFICATION: PK-95540-001
6- MANUFACTURING I.D. CAN BE EITHER MXI, MG OR MXF.
7- KAPTON ADHESIVE FOIL: 0.125 THICK

LAST INSPECTION BALLOON: 14

MATERIAL NUMBER	PLATING
95540-7886	2
95540-7885	7

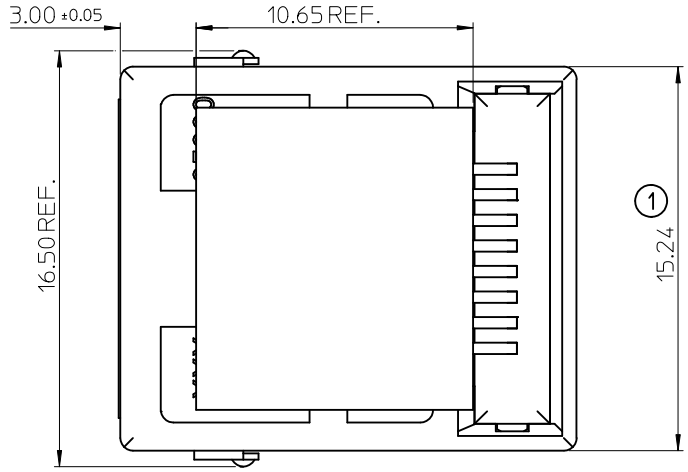

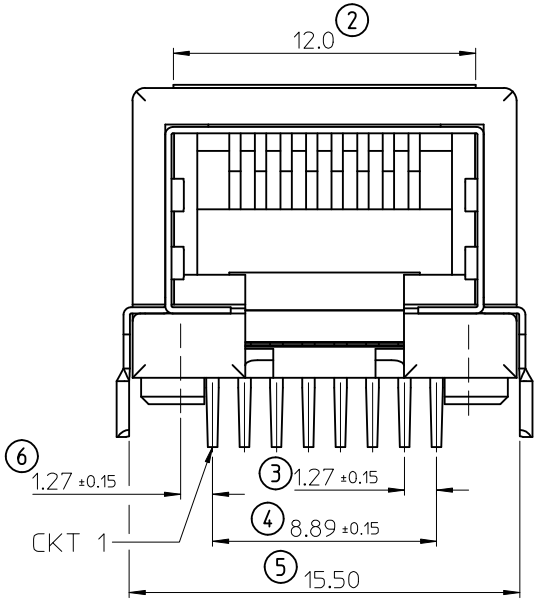

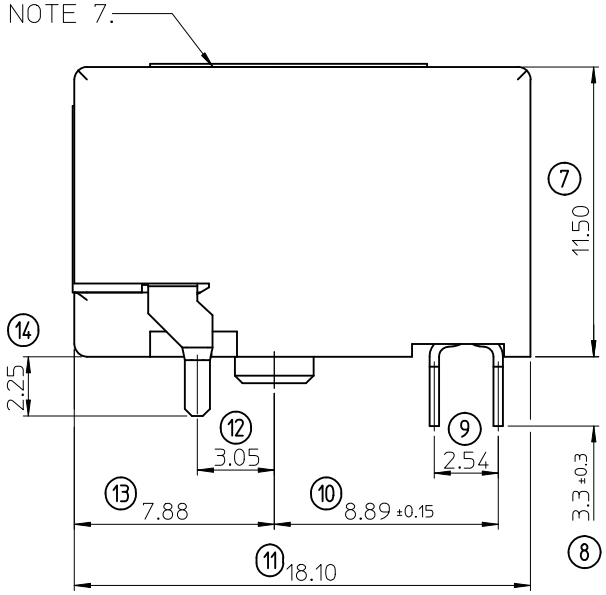

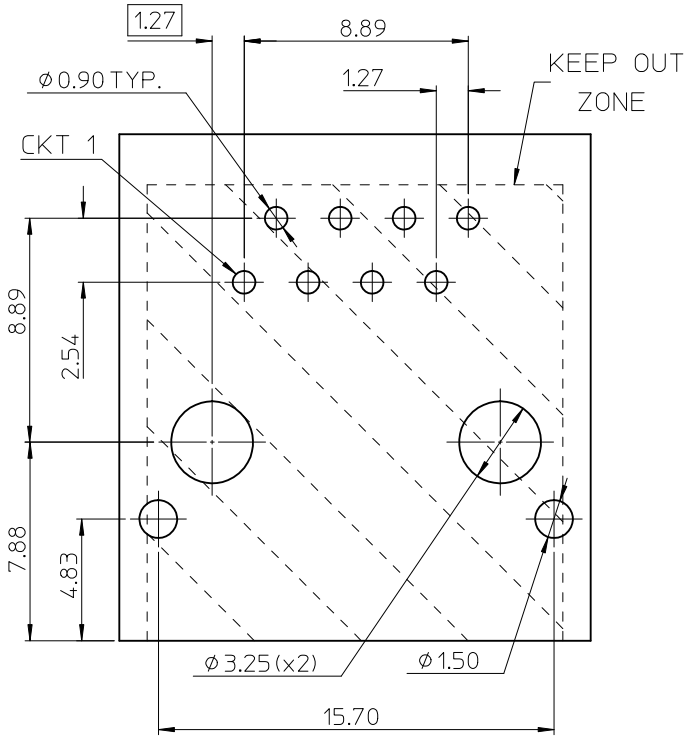

RECOMMENDED P.C. BOARD LAYOUT
VIEW FROM COMPONENT SIDE
ALL DIMENSIONS REF DIMENSIONS

ADDED OPTION
EC NO: E2012-0092
DRWN:DBYRNES 2011/03/10
CH'KD: 2011/10/13
APPR:EFOLAN
DESCRIPTION
B
REV

QUALITY SYMBOLS
▼=0
Ⓒ=0

GENERAL TOLERANCES (UNLESS SPECIFIED)

	mm	INCH
4 PLACES	± ---	± ---
3 PLACES	± ---	± ---
2 PLACES	± 0.10	± ---
1 PLACE	± 0.15	± ---
ANGULAR ± .5 °		

DRAFT WHERE APPLICABLE MUST REMAIN WITHIN DIMENSIONS

DIMENSION STYLE: MM ONLY
SCALE: 5:1
DESIGN UNITS: METRIC
THIRD ANGLE PROJECTION

DRAWN BY: D.BYRNES DATE: 2009/08/20
CHECKED BY: JDWALLACE DATE: 2009/08/21
APPROVED BY: JDWALLACE DATE: 2009/08/21
MATERIAL NO.: SEE CHART

TITLE: RIGHT ANGLE LOW PROFILE SHIELDED PC JACK 8CKT T/HOLE

molex MOLEX INCORPORATED

DOCUMENT NO.: SD-95540-002
SHEET NO.: 1 OF 1
SIZE: A3

THIS DRAWING CONTAINS INFORMATION THAT IS PROPRIETARY TO MOLEX INCORPORATED AND SHOULD NOT BE USED WITHOUT WRITTEN PERMISSION