THIS DRAWING IS UNPUBLISHED. RELEASED FOR PUBLICATION -,- .
© COPYRIGHT - By - ALL RIGHTS RESERVED.

LOC	DIST
CM	00

REVISIONS

P	LTR	DESCRIPTION	DATE	DWN	APVD
	T	REVISED PER ECO-11-013373	15JUL11	HMR	SM
	U	ECR-13-008537	16SEP13	M.T	D.Z

YES	71.12[2.800]	28	5-641238-8
YES	68.58[2.700]	27	5-641238-7
YES	66.04[2.600]	26	5-641238-6
YES	63.50[2.500]	25	5-641238-5
YES	60.96[2.400]	24	5-641238-4
YES	58.42[2.300]	23	5-641238-3
YES	55.88[2.200]	22	5-641238-2
YES	53.34[2.100]	21	5-641238-1
YES	50.80[2.000]	20	5-641238-0
YES	48.26[1.900]	19	4-641238-9
YES	45.72[1.800]	18	4-641238-8
YES	43.18[1.700]	17	4-641238-7
YES	40.64[1.600]	16	4-641238-6
YES	38.10[1.500]	15	4-641238-5
YES	35.56[1.400]	14	4-641238-4
YES	33.02[1.300]	13	4-641238-3
YES	30.48[1.200]	12	4-641238-2
YES	27.94[1.100]	11	4-641238-1
YES	25.40[1.000]	10	4-641238-0
YES	22.86[.900]	9	3-641238-9
YES	20.32[.800]	8	3-641238-8
YES	17.78[.700]	7	3-641238-7
YES	15.24[.600]	6	3-641238-6
YES	12.70[.500]	5	3-641238-5
YES	10.16[.400]	4	3-641238-4
YES	7.62[.300]	3	3-641238-3
YES	5.08[.200]	2	3-641238-2
NO	71.12[2.800]	28	~~2-641238-8~~	SUPERSEDED BY 5-641238-8 △7
NO	68.58[2.700]	27	~~2-641238-7~~	SUPERSEDED BY 5-641238-7 △7
NO	66.04[2.600]	26	~~2-641238-6~~	SUPERSEDED BY 5-641238-6 △7
NO	63.50[2.500]	25	~~2-641238-5~~	SUPERSEDED BY 5-641238-5 △7
NO	60.96[2.400]	24	~~2-641238-4~~	SUPERSEDED BY 5-641238-4 △7
NO	58.42[2.300]	23	~~2-641238-3~~	SUPERSEDED BY 5-641238-3 △7
NO	55.88[2.200]	22	~~2-641238-2~~	SUPERSEDED BY 5-641238-2 △7
NO	53.34[2.100]	21	~~2-641238-1~~	SUPERSEDED BY 5-641238-1 △7
NO	50.80[2.000]	20	~~2-641238-0~~	SUPERSEDED BY 5-641238-0 △7
NO	48.26[1.900]	19	~~1-641238-9~~	SUPERSEDED BY 4-641238-9 △7
NO	45.72[1.800]	18	~~1-641238-8~~	SUPERSEDED BY 4-641238-8 △7
NO	43.18[1.700]	17	~~1-641238-7~~	SUPERSEDED BY 4-641238-7 △7
NO	40.64[1.600]	16	~~1-641238-6~~	SUPERSEDED BY 4-641238-6 △7
NO	38.10[1.500]	15	~~1-641238-5~~	SUPERSEDED BY 4-641238-5 △7
NO	35.56[1.400]	14	1-641238-4
NO	33.02[1.300]	13	~~1-641238-3~~	SUPERSEDED BY 4-641238-3 △7
NO	30.48[1.200]	12	1-641238-2
NO	27.94[1.100]	11	1-641238-1
NO	25.40[1.000]	10	1-641238-0
NO	22.86[.900]	9	641238-9
NO	20.32[.800]	8	641238-8
NO	17.78[.700]	7	641238-7
NO	15.24[.600]	6	641238-6
NO	12.70[.500]	5	641238-5
NO	10.16[.400]	4	641238-4
NO	7.62[.300]	3	641238-3
NO	5.08[.200]	2	641238-2
LEADFREE	DIM A	NO. OF CIRCUITS	PART NO.

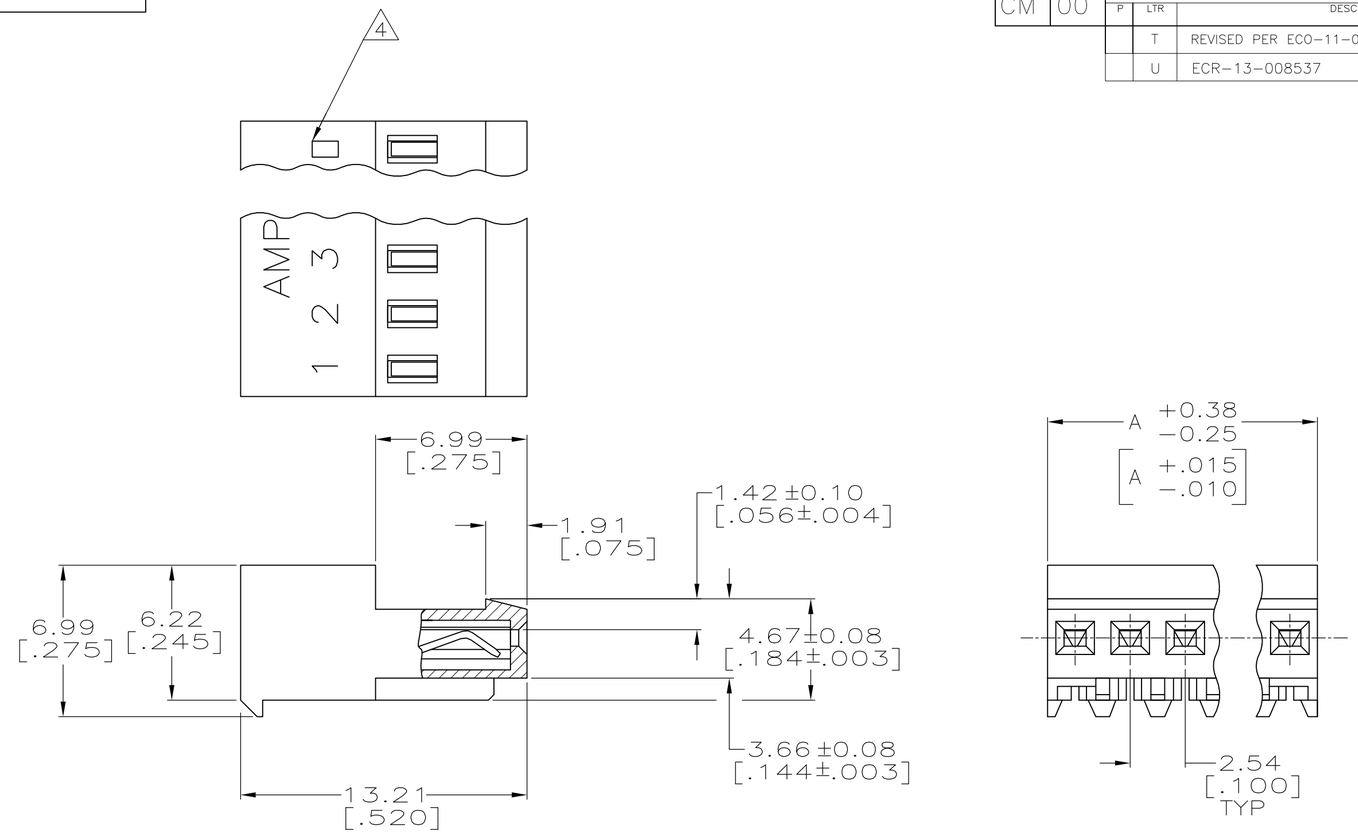

Ⓤ △1 MATERIAL: CONNECTOR - NYLON UL94V-2 (WHITE).
CONTACTS - 0.30[.012] THICK COPPER ALLOY
0.00076 [.000030] GOLD) OR 0.00076[.000030]
TOTAL GOLD FLASH OVER PALLADIUM NICKEL,
PER TE CONNECTIVITY'S DISCRETION, IN CONTACT
AREA WITH MATTE TIN FOR 641238-2
THRU 2-641238-8,MATTE WHISKER MITIGATED TIN
FOR 3-641238-2 THRU 5-641238-8 OVER
NICKEL UNDERPLATE.

2. CONTACTS ACCEPT 24 AWG WIRE WITH 1.52[.060] MAX INSULATION DIAMETER.

3. CONTACTS MUST ACCEPT 0.64±0.03 [.025±.001] SQUARE POST AND REMAIN LOCKED IN POSITION.

△4 IDENTIFICATION NUMBER FOR LAST CIRCUIT MAY NOT APPEAR ON ALL ASSEMBLIES.

5. DIMENSIONS IN BRACKETS ARE IN INCHES.

6. HOUSING FEATURES ARE: CLOSED END WITH LOCKING RAMP.

△7 OBSOLETE PARTS: OBSOLETE CIS STREAMLINING PER D.RENAUD/D.SINISI

METRIC

THIS DRAWING IS A CONTROLLED DOCUMENT.

DIMENSIONS: mm [INCHES]

TOLERANCES UNLESS OTHERWISE SPECIFIED:
0 PLC ±
1 PLC ±
2 PLC ±
3 PLC ± 0.13 [.005]
4 PLC ±
ANGLES ±

MATERIAL △1
FINISH △1

DWN 07AUG2003 S. CARPENTER
CHK 07AUG2003 D. BOSSI
APVD 07AUG2003 D. BOSSI
PRODUCT SPEC 108-1050
APPLICATION SPEC 114-1019
WEIGHT

TE Connectivity

NAME MTA-100 CONNECTOR ASSEMBLY, 24 AWG, STANDARD

SIZE	CAGE CODE	DRAWING NO	RESTRICTED TO
A2	00779	C-641238	—

CUSTOMER DRAWING | SCALE 5:1 | SHEET 1 OF 1 | REV U

641238

'A/C BUSINESS GROUP' 3323 177-34 'NICK GANNON'

1471-9 (3/11)