nichicon

SPEC No. E1894

REFERENCE

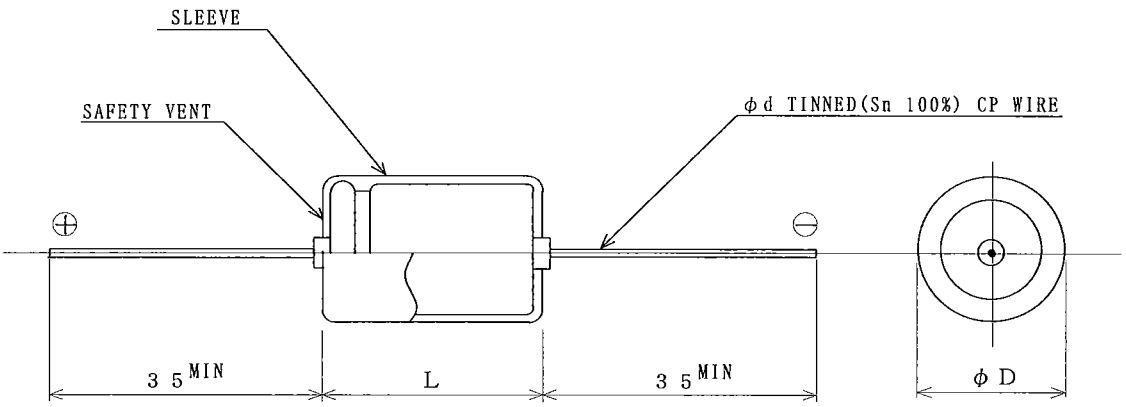

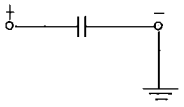

CONNECTION DIAGRAM

〔MARKING〕

nichicon
47μF 450V
VX(M)
85℃
EIA DATE CODE
PET

〔SLEEVE〕

COLOR	PURPLE BLUE
MATERIAL	P.E.T.
MARKING	WHITE

〔DIMMENSIONS〕

φD	23.0 MAX.
L	42.0 MAX.
φd	0.8 ±0.05

(mm)

ELECTRICAL CHARACTERISTICS

TERMINAL	RATED VOLTAGE (V.D.C)	SURGE VOLTAGE (V.D.C)	RATED CAPACITANCE (μF)	CAPACITANCE TOLERANCE (%)	tan δ (MAX.)	LEAKAGE CURRENT (μA MAX.)	RIPPLE CURRENT (mArms MAX.)	
	450	500	47	±20	0.25	430	310	
			at 120Hz 20℃			after 5min.	at 120Hz 85℃	

TEST STANDARD JIS C5101-4 (CATEGORY TEMP. RANGE -25 ~ +85 ℃)

MARK	DATE	DESCRIPTIONS	PIC

REVISION

APPROVED M. Kashiwagi

CHECKED ——

DESIGNED M. Saitou

New release	PIC 斉藤	DATE '12/01/10

NICHICON CORPORATION

NICHICON TYPE No. TVX2W470MDD

RATE 450V 47μF

CASE SIZE φ22 × 40L

DWG. No. N120110Q2−

ver.110107