THIS DRAWING IS UNPUBLISHED. RELEASED FOR PUBLICATION -,- .
© COPYRIGHT - By - ALL RIGHTS RESERVED.

| LOC | DIST |
|---|---|
| CM | 0 |

REVISIONS

| P | LTR | DESCRIPTION | DATE | DWN | APVD |
|---|---|---|---|---|---|
| | E1 | REVISED PER ECR-16-010553 | 07AUG2017 | BW | SG |

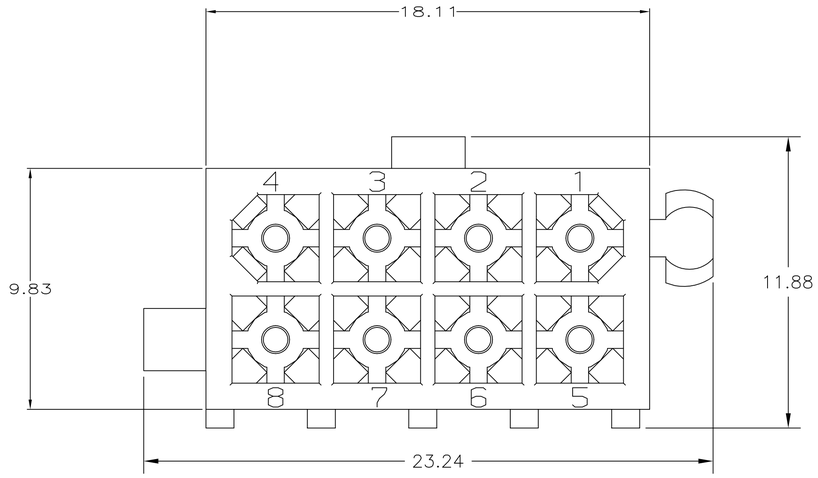


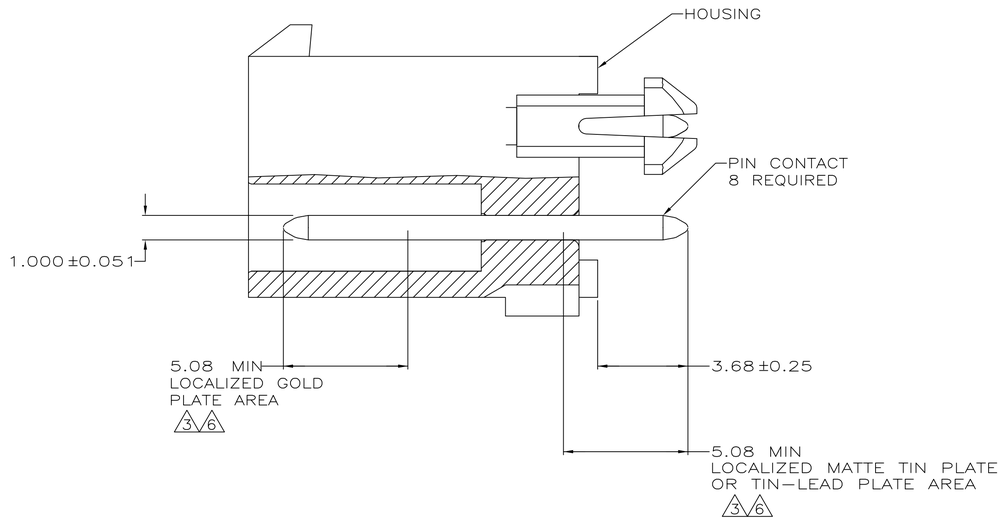


1. PINS TO COMPLY WITH AMP SOLDERABILITY SPEC. 109-11-3.

2. 0.00381 MIN MATTE TIN LEAD PLATE OVER 0.00127 MIN NICKEL.

3. 0.00076 MIN GOLD PLATE IN THE LOCALIZED PLATE AREA, 0.00381 MATTE TIN LEAD IN THE LOCALIZED PLATE AREA, BOTH OVER 0.00127 MIN NICKEL.

4. 0.00381 MIN MATTE TIN PLATE OVER 0.00127 MIN NICKEL.

5. 0.00076 MIN GOLD PLATE IN THE LOCALIZED PLATE AREA, 0.00381 MATTE TIN IN THE LOCALIZED PLATE AREA, BOTH OVER 0.00127 MIN NICKEL.

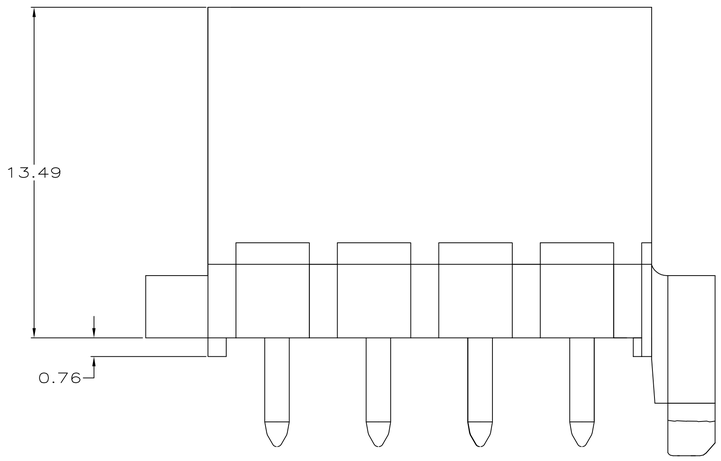


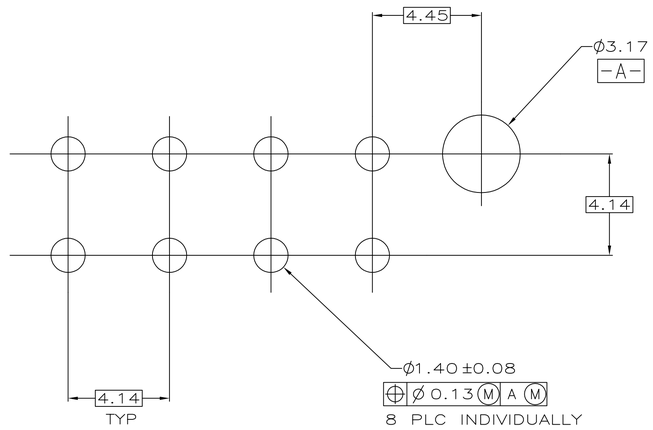


RECOMMENDED MOUNTING HOLE PATTERN
FOR 1.57 THICK P.C. BOARD

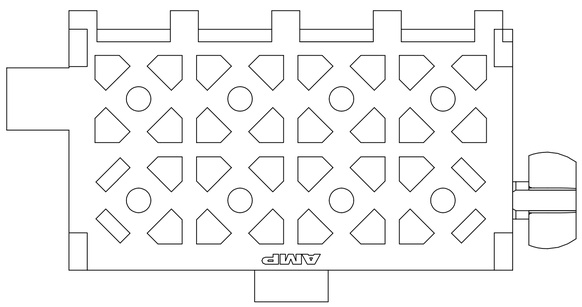


| MATERIAL (PIN) | FINISH | MATERIAL (HOUSING) | COLOR | PART NO. |
|---|---|---|---|---|
| BRASS, TIN | 4 | HIGH TEMP NYLON, UL94V-2 | BLACK | 6-794065-0 |
| BRASS, TIN | 4 | HIGH TEMP NYLON, UL94V-0 | BLACK | 5-794065-0 |
| BRASS, GOLD | 5 | NYLON, UL94V-0 | WHITE | 1-794065-1 |
| BRASS, TIN | 4 | NYLON, UL94V-0 | WHITE | 1-794065-0 |
| BRASS, GOLD | 3 | NYLON, UL94V-0 | WHITE | 794065-2 |
| BRASS, TIN-LEAD | 2 | NYLON, UL94V-0 | WHITE | 794065-1 |

THIS DRAWING IS A CONTROLLED DOCUMENT.

DIMENSIONS: mm

TOLERANCES UNLESS OTHERWISE SPECIFIED:
0 PLC ± -
1 PLC ± -
2 PLC ± 0.13
3 PLC ± -
4 PLC ± -
ANGLES ± -

MATERIAL -
FINISH -

DWN S CARPENTER 09JUN05
CHK R JONES 28JUL2003
APVD R JONES 28JUL2003
PRODUCT SPEC —
APPLICATION SPEC —
WEIGHT —

TE Connectivity

NAME
HEADER ASSEMBLY, 8 CKT,
DOUBLE ROW VERTICAL,
MINI UNIVERSAL MATE-N-LOK(TM)

| SIZE | CAGE CODE | DRAWING NO | RESTRICTED TO |
|---|---|---|---|
| A1 | 00779 | C-794065 | — |

CUSTOMER DRAWING | SCALE 8:1 | SHEET 1 OF 1 | REV E1