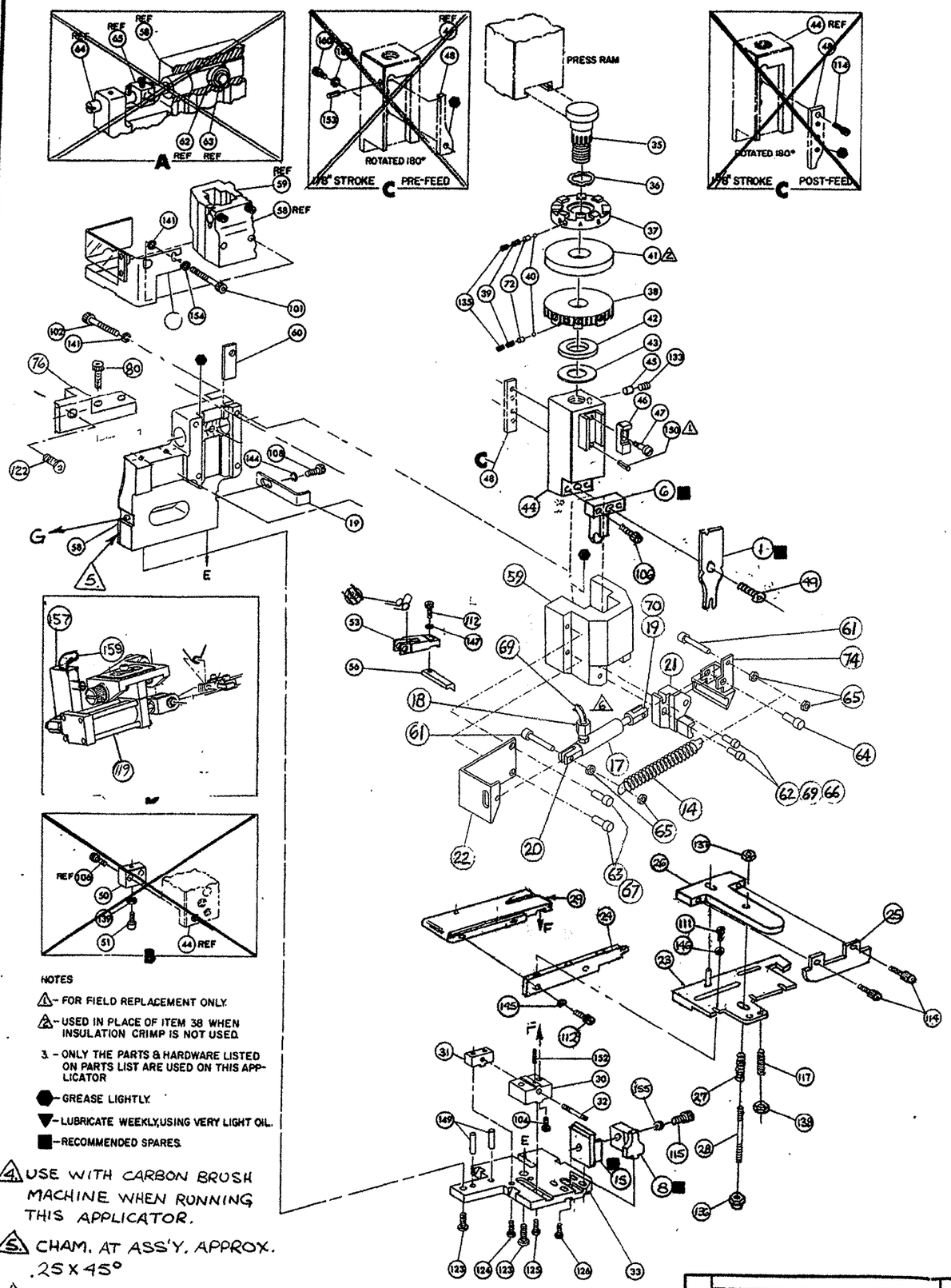

REQ.	PART NO.	DESCRIPTION	NO.	REQ.	PART NO.	DESCRIPTION	NO.
—		WASHER, LOCK #10 CAM	162	1	690517-1	SPACER	71
—		SCR, SOC HD CAP (10-32 X 1.00) CAM	161	1	21018-6	NUT, HEX #8	70
1	22294-6	ELBOW-1/8 NPT X 1/4 O.D TUBING	160	AR	24028-1	TUBING 1/8 O.D.	69
—	21045-2	RING, RET "C" .156 DIA DRAG RELEASE	159	2	21899-1	WASHER, FLAT #6	68
1	23054-1	VALVE, FLOW CONTROL	158	2	21024-5	WASHER, LOCK #10	67
—		WASHER LOCK #8 FEED RETURN SPRING MT.	157	2	21024-3	WASHER, LOCK #6	66
1	21024-3	WASHER LOCK #6 SHEAR PLATE	156	4	21021-1	NUT, SELF LOCKING #4	65
2	22260-7	WASHER, FLAT #10 GUARD	155	1	1-21989-1	SCR, SOC SHLDR 8-32 X .50	64
—		PIN, SLOTTED SPR (.125 DIA X .25) CAM	154	2	3-21000-9	SCR, SHC 10-32 X .75	63
1	3-21028-5	PIN, SLOTTED SPR (.093 DIA X .43) BASE BLK	153	2	2-21000-1	SCR, SHC 6-32 X .625	62
—		PIN, SLOTTED SPR (.125 DIA X .50) ADJ ROD	152	2	1-21000-7	SCR, SHC 4-40 X .75	61
—	21028-2	PIN, SLOTTED SPR (.062 DIA X .25) RAM ⚠1	151	1	240846-1	PLATE, WEAR	60
2	2-21030-2	PIN, DOWEL (.250 DIA X .75) BASE PLATE	150	1	679685-1	CAP, RAM (MACH)	59
—		PIN, DOWEL (.187 DIA X 1.00) LEVER	149	1	844393-1	HOUSING	58
1	21024-4	WASHER, LOCK #8 FEED FINGER	148	1	7-22846-0	PIN, COTTER 5/64 DIA	57
3	21024-3	WASHER, LOCK #6 FRONT STRIP GUIDE	147	1	844382-1	PAWL, FEED	56
2	21024-3	WASHER, LOCK #6 STRIP GUIDE MOUNT	146	—		PIN, FEED FINGER	55
—	21024-4	WASHER, LOCK #8 STRIPPER	145	1		SPRING, FEED FINGER	54
—	21024-4	WASHER, LOCK #8 DEPRESSOR	144	1	461062-1	FINGER, FEED ASSY	53
1	21024-5	WASHER, LOCK #10 ADJ PLATE	143	—		LEVER, TERMINAL FEED ARM	52
4	21024-5	WASHER, LOCK #10 RAM	142	—		BUMPER, HOLDDOWN	51
—		NUT, HEX (6-32) FEED ADJ.	141	—		SPACER, TONKER	50
—	21018-6	NUT, HEX (8-32) HOLD DOWN	140	1	7-21002-9	BOLT, CRIMPER	49
2	21068-5	NUT, HEX (6-32) DRAG ADJ.	139	—		CAM PRE FEED 1/8 STROKE	48
1	21018-7	NUT, HEX (10-32) DRAG STUD	138	—	22353-8	SCREW, SHOULDER (.187 DIA X .250 LG.)	47
1	21022-3	NUT, HEX (10-32 S/L) DRAG STUD	137	—	690402-	BLOCK, INS ADJ	46
1	2-21006-7	SCR, SOC SET (6-32 X .12) C.P. DISC	136	1	690191-1	PLUG, NYLON	45
—		SCR, SOC HD CAP (10-32 X .38) PIVOT BLK	135	1	683184-1	RAM	44
1	21009-2	SCR, SOC SET (NYLOK) (1/4-20 X .25) RAM	134	1	690125-1	WASHER, LAMINATED	43
			133	1	690124-1	WASHER, RAM	42
—	22353-8	SCR, SHLD (.187 DIA X .250 LG.) DRAG LEVER	132	1	690223-1	DISC, SPACER ⚠5	41
—	22353-1	SCR, SHLD (.125 DIA X .125 LG.) STRIPPER	131	1	23241-6	BALL, STEEL	40
			130	1	690170-1	SPRING, COMPRESSION	39
1	374112	SPRING	129	—		DISC, INSULATION	38
—	2-21002-2	SCR, BUT HD SOC CAP (8-32 X .50) SHEAR	128	1	1-690692-9	DISC, WIRE	37
			127	1	22480-5	WASHER, SPRING	36
1	22733-8	SCR, BUT HD SOC CAP (8-32 X .38) ANVIL	126	1	690212-1	POST, RAM	35
1	2-21002-4	SCR, BUT HD SOC CAP (10-32 X .38) BASE BLOCK	125	—		SUPPORT, TERMINAL	34
2	2-21002-7	SCR, BUT HD SOC CAP (10-32 X .50) SCR, BLOCK	124	1	844380-1	PLATE, BASE	33
2	3-21002-4	SCR, BUT HD SOC CAP (1/4-20 X .62) BASE PL	123	1	844386-1	SCREW, ADJUSTMENT	32
1	4-21002-5	SCR, BUT HD SOC CAP 3/8-16 X .62	122	1	844387-1	BLOCK, SCREW	31
1	29198-1	PIN, COVERING	121	1	844381-1	BLOCK, BASE	30
1	374651	PIN, CLEVIS	120	1	844392-1	PLATE, STRIP GUIDE	29
1	461065-7	ASS'Y, AIR FEED	119	1	1-22354-9	STUD, DRAG	28
—		SCR, RD. HD. MACH (6-32 X 1.50) FEED ADJ.	118	1	6-22282-9	SPRING, DRAG	27
4	4-21006-6	SCR, SOC SET (8-32 X .75) DRAG ADJ.	117	1	803952-1	SUPPORT, DRAG STOCK	26
—		SCR, SOC HD CAP (10-32 X) DRAG	116	1	803953-1	DRAG, STOCK	25
1	12-21000-0	SCR, SOC HD CAP (6-32 X .50) R. SHEAR PL	115	1	679970-1	MOUNT, STRIP GUIDE	24
2	2-21000-0	SCR, SOC HD CAP (4-32 X .50) DRAG	114	1	679762-1	GUIDE, FRONT STRIP	23
—	7-21000-9	SCR, SOC HD CAP (4-40 X .18) COVER PLATE	113	1	679750-1	BRACKET, AIR CYLINDER	22
4	1-21000-9	SCR, SOC HD CAP (6-32 X .38) F. STRIP GUIDE MOUNT	112	1	679745-1	GUIDE, FIXED	21
3	1-21000-9	SCR, SOC HD CAP (6-32 X .38) F. STRIP GUIDE	111	1	25660-1	CLEVIS, MALE	20
—		SCR, SOC HD CAP (8-32 X .38) FEED GUIDE SPRING MOUNT	110	1	25659-1	CLEVIS, FEMALE	19
—	2-21000-6	SCR, SOC HD CAP (8-32 X .38) FEED FINGER	109	1	23201-1	FITTING, 10-32 TO 1/8 TUBING	18
—	2-21000-7	SCR, SOC HD CAP (8-32 X .50) STRIPPER	108	1	24399-1	CYLINDER, AIR, EJECT	17
—		SCR, BUT HD SOC CAP (8-32 X) R. STRIP GUIDE	107	1	1-22287-6	SPRING, EXTENSION LE-031C-5	16
2	2-21000-9	SCR, SOC HD CAP (8-32 X .75) DEPRESSOR	106	1	683478-1	PLATE, SHEAR REAR ■	15
1	3-21000-8	SCR, SOC HD CAP (10-32 X .88) DRAG	105	—		HOLDER, SHEAR REAR	14
2	3-21000-4	SCR, SOC HD CAP (10-32 X .38) BASE BLOCK	104	—		SHEAR, FLOAT REAR ■	13
1	3-21000-7	SCR, SOC HD CAP (10-32 X .75) ADJ BLOCK	103	—	5-22280-0	SPRING, SHEAR	12
2	4-21000-1	SCR, SOC HD CAP (10-32 X 1.50) RAM CAP	102	—	690461-1	STOP, SHEAR	11
2	4-21000-2	SCR, SOC HD CAP (10-32 X 1.75) RAM CAP	101	—		HOLDER, SHEAR FRONT	10
2	21001-6	SCR, SOC HD CAP 1/4-20 X 1.00	80	—		SHEAR, FLOAT FRONT ■	9
—	465184-6	LUBRICATOR ASSY	79	1	683477-1	ANVIL ■	8
—	22014-1	OIL, SYNTHETIC	78	—		SPACER, DEPRESSOR REAR	7
1	461066-2	CLEVIS, FEED	77	1	683475-1	SHEAR BLADE (SPECIAL) ■	6
1	844383-1	BRACKET, FEED MT'G.	76	—		DEPRESSOR, SHEAR FRONT	5
1	455112-3	POSITIONER, WIRE ⚠4	75	—		SPACER, TUBULAR, INS CRIMPER	4
1	679744-1	GUIDE, RIGHT	74	—		CRIMPER, INSULATION ■	3
—	690614-1	PLATE, STRIP GUIDE COVER	73	—		SPACER, CRIMPER	2
1	690603-1	SPRING, ASSIST	72	1	610573-5	CRIMPER, WIRE ■	1

NOTES

⚠1 - FOR FIELD REPLACEMENT ONLY.

⚠2 - USED IN PLACE OF ITEM 38 WHEN INSULATION CRIMP IS NOT USED.

3. - ONLY THE PARTS & HARDWARE LISTED ON PARTS LIST ARE USED ON THIS APPLICATOR

⬢ - GREASE LIGHTLY.

▼ - LUBRICATE WEEKLY, USING VERY LIGHT OIL.

■ - RECOMMENDED SPARES.

⚠4 USE WITH CARBON BRUSH MACHINE WHEN RUNNING THIS APPLICATOR.

⚠5 CHAM. AT ASS'Y. APPROX. .25 X 45°

⚠6 TUBING FROM FF2 "C" (THRU MANIFOLD "B")

CRIMPING DATA

THIS APPLICATOR WILL APPLY: 62890

PAD LETTER	CRIMP HEIGHT	WIRE SIZE	WIRE STRIP LENGTH
A	.062	18	
B	.058	20	
C	.055	22	
D	NOT	USED	

	SIZE	TYPE	FEED
CRIMP			
WIRE	.090	"F"	.480
INSULATION	—	—	

INSULATION RANGE	WIRE RANGE	APPLICATOR INSTRUCTION
—	22-18	

REMARKS: USE WITH BRUSH MACHINE 459248-7 ONLY

LTR	REVISION RECORD	ECN	DR	CK	DATE
C2	ECN 0150-1233-04				9-04
C1	ECN 0150-1225-02				9-02
C	0150-5598-94				8-94
B	0150-4714-93		HM		8-93
A	REVISED				2-89

SET UP GAGE —; LAYOUT NO. 1085E/1085A; DRAWN R. Phillips 11-28-88; CHECKED; APPROVED; REL. 3/89

AMP INCORPORATED HARRISBURG, PENNA.

LOC A C; NO. 567314-1; REV. C2

SCALE NONE

NAME: MINIATURE QUICK CHANGE APPLICATOR SIDE-FEED (FOR CARBON BRUSH MACHINE)

CUSTOMER AND ASSEMBLY DRAWING

CAGE CODE 00779

THIS DRAWING IS A CONTROLLED DOCUMENT FOR AMP INCORPORATED. IT IS SUBJECT TO CHANGE AND THE CONTROLLING ENGINEERING ORGANIZATION SHOULD BE CONTACTED FOR THE LATEST REVISION.

THIS IS A CONTROLLED DOCUMENT.

THIS DRAWING IS UNPUBLISHED COPYRIGHT 1999 BY AMP INCORPORATED ALL RIGHTS RESERVED RELEASED FOR PUBLICATION 11

PRINT 66

AMP 2002