© – TE Connectivity. All Rights Reserved.

REVISIONS					
P	LTR	DESCRIPTION	DATE	DWN	APVD
	F	REVISED PER ECO-20-001327	04JUN2020	SB	JO

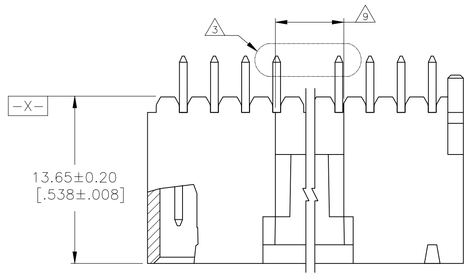

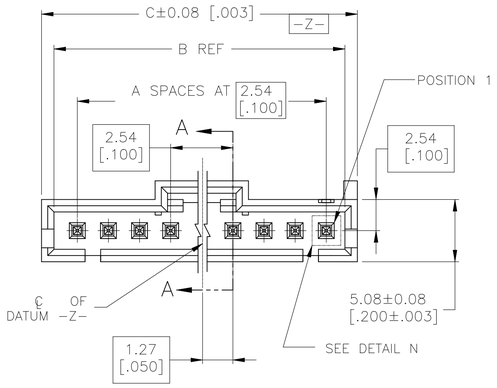

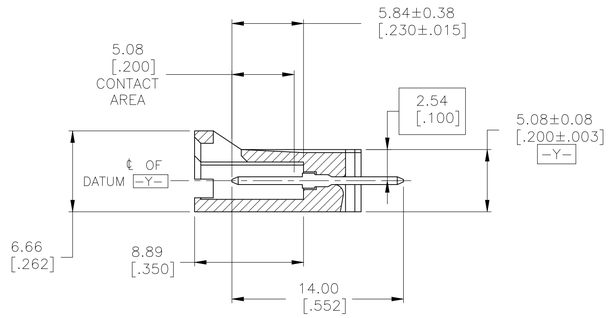

SECTION A–A

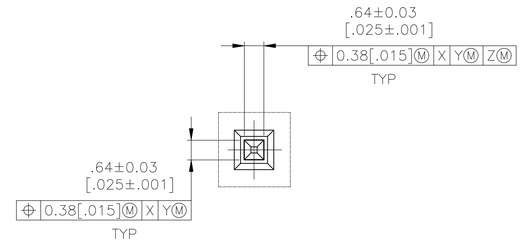

DETAIL N
SCALE 10:1

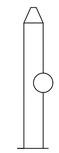

DETAIL Z
POST DETAIL TYP
2 POST MINIMUM
SCALE 10:1

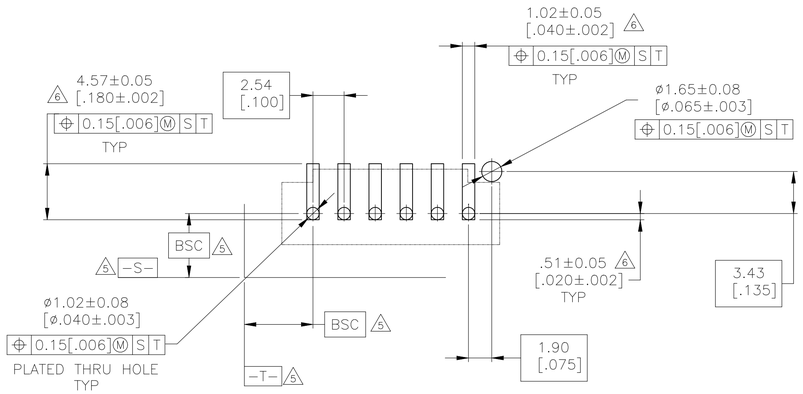

RECOMMENDED PC BOARD MOUNTING DIMENSIONS
RECOMMENDED STENCIL THICKNESS = 0.25[.010]

1. HOUSING: LCP, COLOR–BLACK.
   POST: BRASS
2. FINISH:0.00076 [.000030] MIN GOLD ON THE CONTACT AREA, 0.00254 [.000100] MIN MATTE TIN–LEAD ON REMAINDER OF CONTACT, ALL OVER 0.00127 [.000050] NICKEL.
3. SELECT POST TAILS FORMED TO PROVIDE CONNECTOR HOLD DOWN UNTIL SOLDERED, CONFIGURATION ACCEPTS 0.69–2.03 [.027–.080] THICK PRINTED CIRCUIT BOARD.(SEE DETAIL Z)
4. PARTS ARE PACKAGED IN GANG TUBES.
5. DATUMS AND BASIC DIMENSIONS ESTABLISED BY CUSTOMER.
6. DIMENSIONS NOTED ARE FOR SOLDER STENCIL LAYOUT FOR USE WITH 1.58±0.20 [.062±.008] THICK PRINTED CIRCUIT BOARDS.
7. PRELIMINARY PART–NOT RELEASED FOR PRODUCTION.
8. FINISH:0.00076 [.000030] MIN GOLD ON THE CONTACT AREA, 0.00254 [.000100] MIN MATTE TIN ON REMAINDER OF CONTACT, ALL OVER 0.00127 [.000050] NICKEL.
9. 0.25 [.010] RECESS PERMISSIBLE IN THIS AREA FOR MOLD SHUT OFF

	8	27.81 [1.095]	25.91 [1.020]	9	10	5–147245–9
	8	22.73 [.895]	20.83 [.820]	7	8	5–147245–7
	8	7.49 [.295]	5.59 [.220]	1	2	5–147245–1
7	2	27.81 [1.095]	25.91 [1.020]	9	10	147245–9
7	2	22.73 [.895]	20.83 [.820]	7	8	147245–7
	2	7.49 [.295]	5.59 [.220]	1	2	147245–1
	PLATING	C	B	A	NO. OF POSN	PART NO.

THIS DRAWING IS A CONTROLLED DOCUMENT.

DIMENSIONS: mm [INCHES]

TOLERANCES UNLESS OTHERWISE SPECIFIED:
0 PLC ± –
1 PLC ± –
2 PLC ± –
3 PLC ± 0.13[.005]
4 PLC ± –
ANGLES ± –

MATERIAL 1

FINISH SEE TABLE

DWN B.HAYMAKER 01APR99
CHK J.GESFORD 02APR99
APVD J.GESFORD 02APR99

PRODUCT SPEC —
APPLICATION SPEC —
WEIGHT —

TE Connectivity

NAME HEADER ASSEMBLY, SINGLE ROW, VERTICAL, 2.54 [.100] CL, 0.64 [.025] SQ POST, LATCHING WITH HOLD DOWN, MTE AMPMODU

SIZE	CAGE CODE	DRAWING NO	RESTRICTED TO
A1	00779	C-147245	—

CUSTOMER DRAWING

SCALE	SHEET	REV
4:1	1 OF 1	F