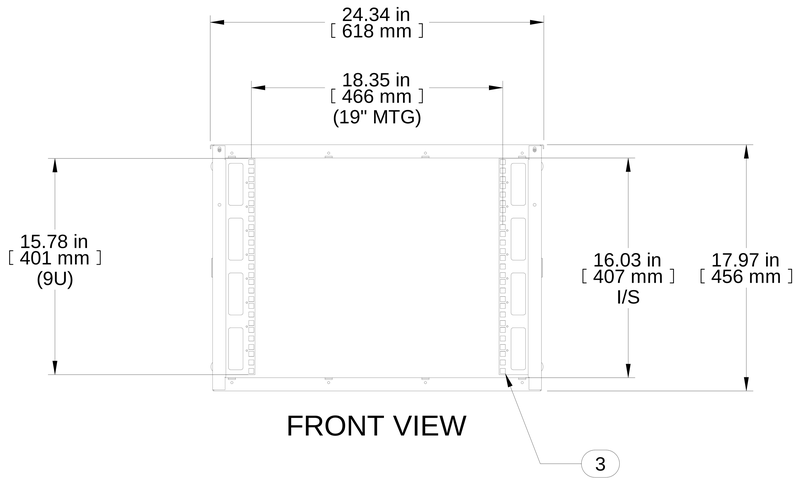

FRONT VIEW

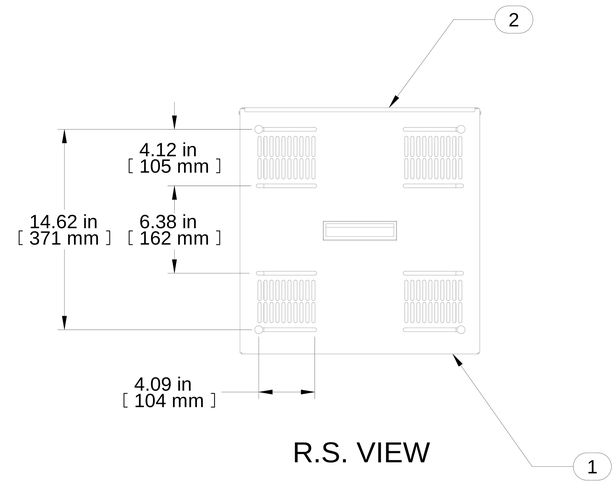

R.S. VIEW

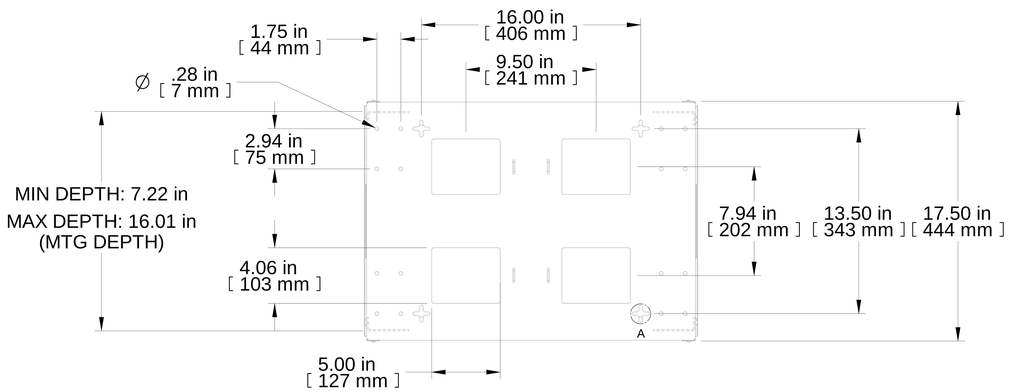

BOTTOM VIEW

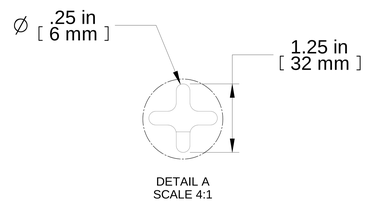

DETAIL A
SCALE 4:1

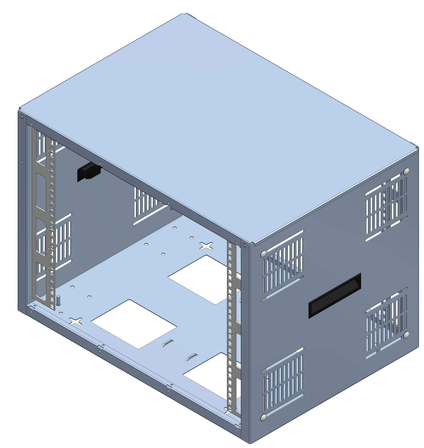

Item Number	Title	Quantity
1	SDC - BODY	1
2	SDC COVER ASSEMBLY	1
3	SDC RAIL - SQUARE HOLE	4

PART NUMBERS

SDC249U17BK PAINTED BLACK TEXTURED

NOTES

Assy Hardware Included
Mounting Hardware Not Included
See Hammond Website for Accessories

Français

Pour tous les détails sur nos produits,
svp veuillez consulter notre site www.hammondmfg.com

Data subject to change without notice. Isometric drawing not to scale.
Les données sont sujettes à changement sans préavis.

HAMMOND MANUFACTURING®

www.hammondmfg.com

PART NO. **SDC249U17BK**