PART NUMBER	GRNDBAR 1 POS	GRNDBAR 2 POS	GRNDBAR 3 POS	GRNDBAR 4 POS	GRNDBAR 5 POS	GRNDBAR 6 POS	GRNDBAR 7 POS	GRNDBAR 8 POS	GRNDBAR 9 POS	GRNDBAR 10 POS
10127112-101LF	2A,3B,2C,3D,2E	5A,4B,5C,4D,5E	6A,7B,6C,7D,6E	9A,8B,9C,8D,9E	10A,11B,10C,11D,10E	16A,17B,16C,17D,16E	19A,18B,19C,18D,19E	20A,21B,20C,21D,20E	23A,22B,23C,22D,23E	24A,25B,24C,25D,24E
10127112-102LF	2A,3B,2C,3D,2E	5A,4B,5C,4D,5E	6A,7B,6C,7D,6E	9A,8B,9C,8D,9E	10A,11B,10C,11D,10E	NIL	NIL	NIL	NIL	NIL
10127112-103LF	NIL	NIL	NIL	NIL	NIL	NIL	NIL	NIL	NIL	NIL

ABOVE TABLE SHOWS CONNECTED GROUND POSITIONS OF INVIDUAL GROUNDBARS

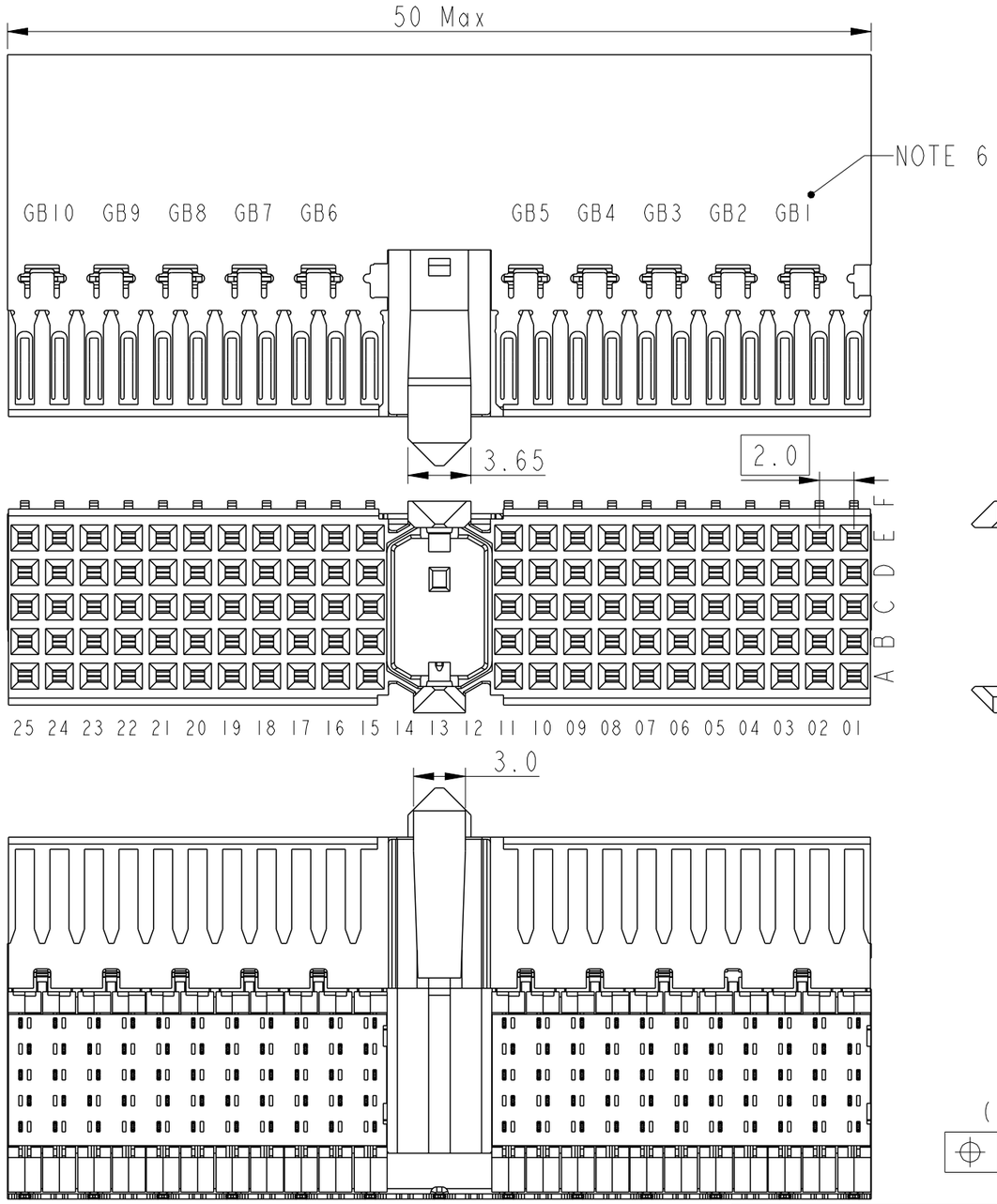

PINNING CONFIGURATION

	01	02	03	04	05	06	07	08	09	10	11		15	16	17	18	19	20	21	22	23	24	25
F	G	G	G	G	G	G	G	G	G	G	G		G	G	G	G	G	G	G	G	G	G	G
E	G	G	HS	HS	G	G	HS	HS	G	G	LS		G	G	HS	HS	G	G	HS	HS	G	G	LS
D	HS	HS	G	G	HS	HS	G	G	HS	HS	G		HS	HS	G	G	HS	HS	G	G	HS	HS	G
C	G	G	HS	HS	G	G	HS	HS	G	G	LS		G	G	HS	HS	G	G	HS	HS	G	G	LS
B	HS	HS	G	G	HS	HS	G	G	HS	HS	G		HS	HS	G	G	HS	HS	G	G	HS	HS	G
A	G	G	HS	HS	G	G	HS	HS	G	G	LS		G	G	HS	HS	G	G	HS	HS	G	G	LS
Z	0	0	0	0	0	0	0	0	0	0	0		0	0	0	0	0	0	0	0	0	0	0

HS	HIGH SPEED SIGNAL
LS	LOW SPEED SIGNAL
G	GROUND
0	EMPTY

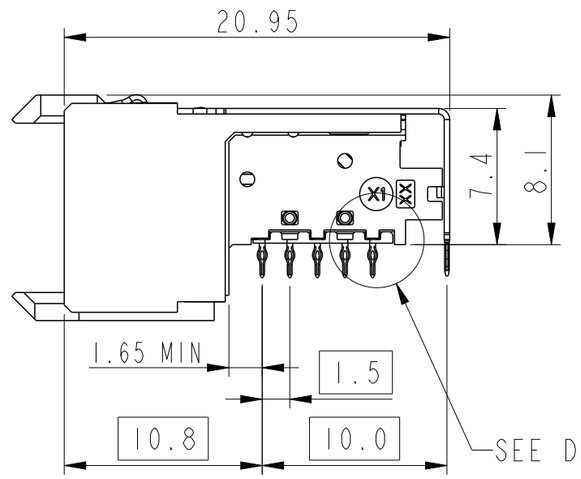

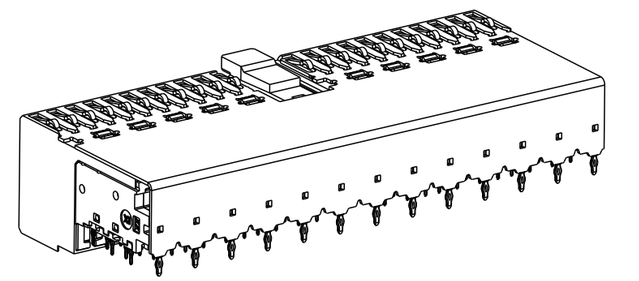

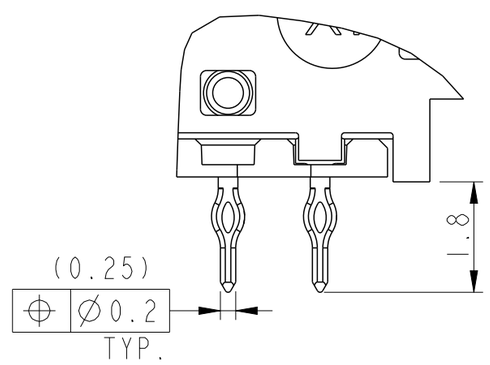

DETAIL A
SCALE 10:1

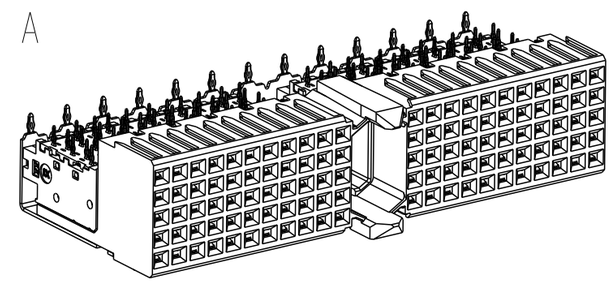

spec ref	-	dr	Binesh C	2016/02/17	projection	MM	size A3 / scale 2:1
tolerance std: ISO 406, ISO 1101	TOLERANCES UNLESS OTHERWISE SPECIFIED	eng	Alex Babu	2019/05/09			ecn no ELX-I-33137-1
		chr	-	-			
		appr	K-Paul Biju	2019/05/09	product family	MILLIPACS	rel level Released
surface - ISO 1302	linear 0.X ±0.30; 0.XX ±0.20; 0.XXX ±0.15; angular 0° ±3°	Amphenol FCi	title: TYPE A RECEPTACLE ASSEMBLY, MILLIPACS HS		dwg no 10127112		rev D
			cat. no.		Product - Customer Drw		sheet 1 of 2

© 2016 AFCI

Creo File - REV E - 2016-02-12

PART NUMBER:

RECOMMENDED PCB LAYOUT FOR 10127112-10xLF

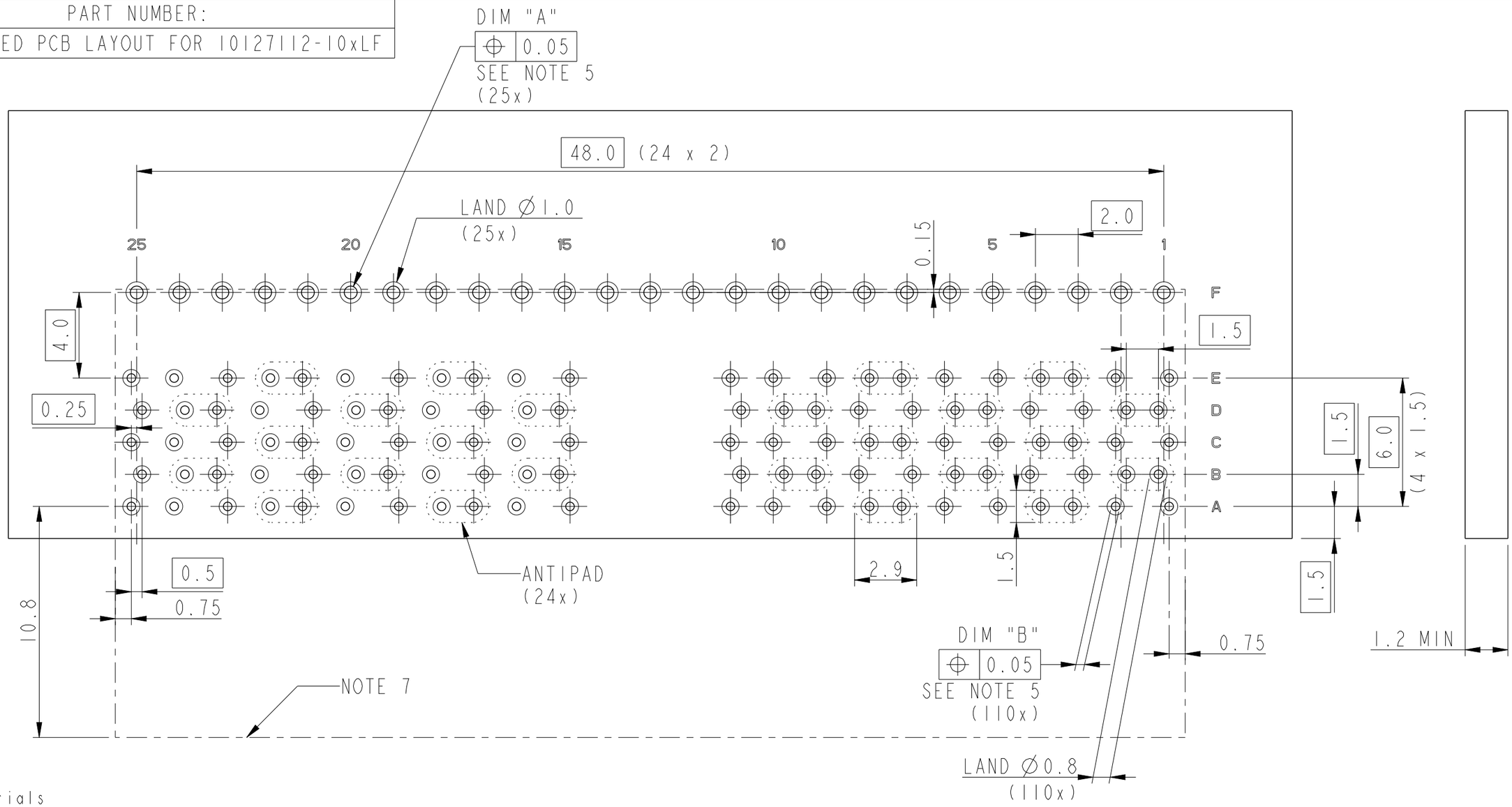

NOTES:

1. Materials
   - Housing & Imla's: LCP (UL94 V-0)
   - Leadframe: Copper alloy
2. Finish
   - Contact area: Ni underlayer with Au or GXT top layer(Performance Level-2)
   - EON area: Ni underlayer with Sn top layer
3. Mates with IEC 61076-4-101 series 2mm HM headers with contact mating level 1 & 2 in signal rows. Outer shielding row of receptacle can mate with level 1,2 & 3 header contacts.
4. Mounting style: Press-fit, flat rock insertion
5. Refer the table for Recommended plated through hole dimensions.
6. Groundbar positions indicated by "GBx".
7. Connector spacing

RECOMMENDED PLATED THROUGH HOLE DIMENSIONS

B	0.35-0.45	0.02-0.05	0.0008-0.0012	0.45-0.49
A	0.55-0.65	0.02-0.05	0.0008-0.0012	0.65-0.69
DIM	FINISHED HOLE DIA	Cu. THICKNESS	Sn THICKNESS	DRILLED HOLE DIA

spec ref -			dr Binesh C	2016/02/17	projection	MM	size A3 / scale 5:1
tolerance std ISO 406 ISO 1101	TOLERANCES UNLESS OTHERWISE SPECIFIED		eng Alex Babu	2019/05/09			ecn no ELX-I-33137-1
			chr -	-			
			appr K-Paul Biju	2019/05/09	product family	MILLIPACS	rel level Released
surface -	linear	0.X	±0.30	Amphenol FCi	title TYPE A RECEPTACLE ASSEMBLY MILLIPACS HS	dwg no 10127112	rev D
		0.XX	±0.20				
		0.XXX	±0.15				
ISO 1302	angular	0°	±3°		cat. no.	Product - Customer Drw	sheet 2 of 2

© 2016 AFCI

Creo File - REV E - 2016-02-12