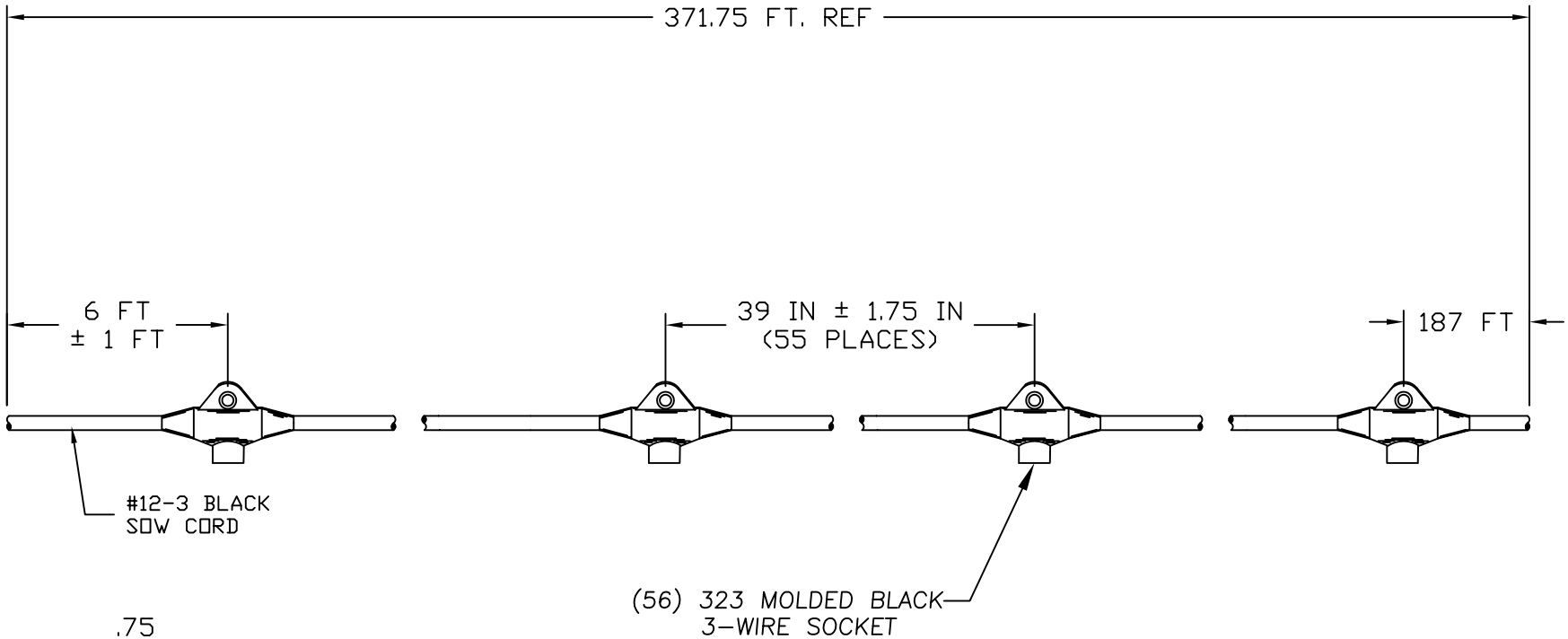

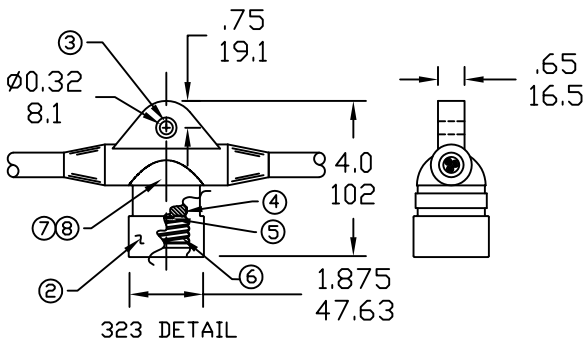

ITEM	DESCRIPTION	MATERIAL
1	#12-3 BLACK CABLE	SOOW/COPPER
2	MOLDED SOCKETS BLACK	NITRILE/PVC
3	EYELET	BRASS
4	BUTTON WHITE	PORCELAIN
5	RIVET	BRASS
6	SCREWSHELL	COOPER
7	1 CONDUCTOR WIRE BLACK	NEOPRENE
8	1 CONDUCTOR WIRE WHITE	NEOPRENE

NOTE:
THE SOCKETS SHOULD NOT HAVE GROUND RINGS; NON-METALLIC GUARDS SHOULD BE USED.

RELEASE DRAWING
EC NO: WNA2011-0173 2010/10/01
DRWN: TVICKERS 2010/10/01
CH'KD: HK —
APPR: DTITUS 2010/10/28
DESCRIPTION
REV A

QUALITY SYMBOLS
▼=0
(C)=0

GENERAL TOLERANCES (UNLESS SPECIFIED)

	mm	INCH
4 PLACES	±---	±---
3 PLACES	±---	±.005
2 PLACES	±0.13	±.010
1 PLACE	±0.25	±.020
ANGULAR ±.5°		

DRAFT WHERE APPLICABLE MUST REMAIN WITHIN DIMENSIONS

DIMENSION STYLE: INCH
SCALE: NTS
DESIGN UNITS: INCH
THIRD ANGLE PROJECTION

DRAWN BY: TVICKERS DATE: 2010/10/01
CHECKED BY: HK DATE: 2010/10/01
APPROVED BY: DTITUS DATE: 2010/10/28

TITLE: STRINGLIGHT 371.75 FT
(56) 323@39IN CENTERS
6' LEAD & 187' TAIL

molex MOLEX INCORPORATED

MATERIAL NO.: 1301060163
DOCUMENT NO.: SD-130106-023
SHEET NO.: 1 OF 1
SIZE: A

THIS DRAWING CONTAINS INFORMATION THAT IS PROPRIETARY TO MOLEX INCORPORATED AND SHOULD NOT BE USED WITHOUT WRITTEN PERMISSION