3M™ TEXTOOL™ QFN TEST AND BURN-IN SOCKET

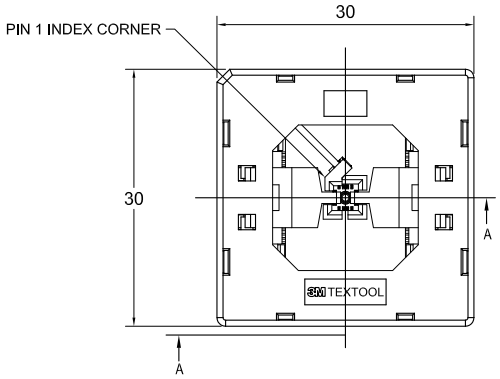

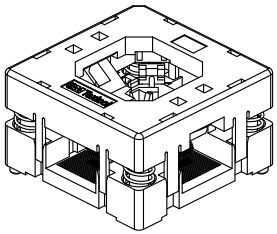

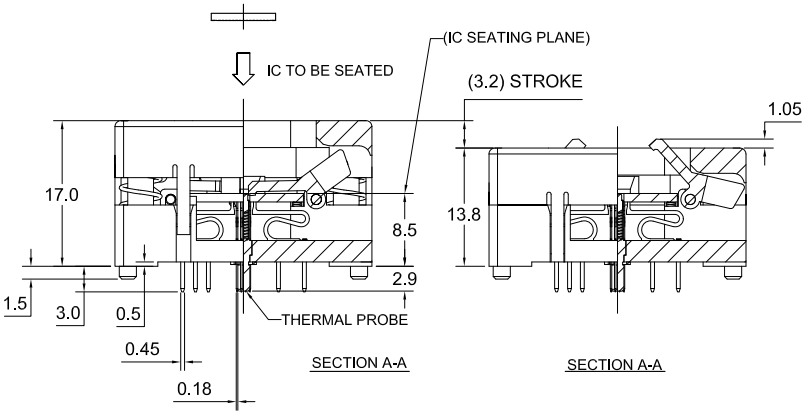

NOTES:

1. MATERIALS:

SPRINGS	SS	
CONTACTS	Be Cu	PLATING : Au
IC GUIDES	PES	COLOR : BLACK
PRESSURE PAD	PES	COLOR : BLACK
COVER	PPS or equiv.	COLOR : BLACK
BASE	PES	COLOR : BLACK

2. SEE THE REGULATORY INFORMATION APPENDIX (RIA) IN THE "RoHS COMPLIANCE" SECTION WWW.3MCONNECTOR.COM FOR COMPLIANCE INFORMATION (RIA E1 & C1 APPLY).

3. FOR PRODUCT SPECIFICATIONS AND WARRANTY INFORMATION SEE:

   WWW.3MCONNECTOR.COM PN 216-5205-01

REV	ECO	ISSUE DATE AND DESCRIPTION	DRFT	CHKD
A	39923	INITIAL RELEASE	LDS	ARM

DESIGN REFERENCE | NEXT ASSEMBLY | DISTRIBUTION CODES

DRFT: L SCHMIDT DATE: 4/2/12 MFG DATE
CHKD DATE APPVL DATE

DIVISION | DIVISION CODE

DO NOT SCALE DRAWING | SCALE 5/1

THIRD ANGLE PROJECTION

INTERPRET PER ASME Y14.5 - 1994

MAX SURFACE ROUGHNESS 125 ☐ ALL SURFACES ☒ MARKED ONLY

TOLERANCES EXCEPT AS NOTED
INCHES: .0 ± .1; .00 ± .02; .000 ± .005; .0000 ± .0002
MILLIMETERS: .0 ±; .0 ±; .00 ±; .000 ±
ANGLES ± 1°

3M Center, St. Paul, MN 55144

© 3M COPYRIGHT 2012
This document is the copyrighted property of the 3M Company and may not be reproduced without 3M written permission or used for other than 3M authorized purposes.

TITLE: QFN TEST SOCKET 0.5mm 16 POS, EVEN ROW, 3X3 PKG WITH TP

CAGE NUMBER | SIZE C | DRAWING NO. 78-5100-2518-8 | REV. A

MODEL: TEXTOOL - QFN | DET. LISTS ☐ YES ☒ NO | SHT 1 OF 2

REVISION A
DRAWING NUMBER 78-5100-2518-8

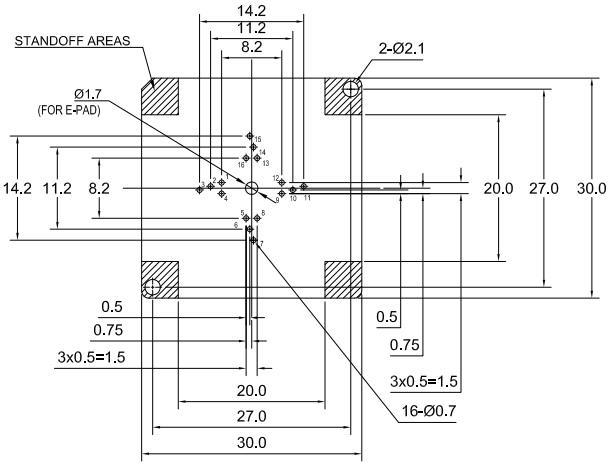

FOOTPRINT AS VIEWED LOOKING DOWN FROM TOP OF SOCKET

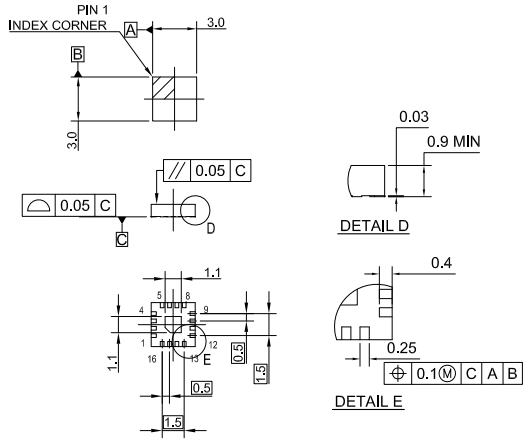

RECOMMENDED IC (REF.)

REV	ECO	ISSUE DATE AND DESCRIPTION	DRFT	CHKD

DESIGN REFERENCE | NEXT ASSEMBLY | DISTRIBUTION CODES

DRFT L SCHMIDT DATE 4/2/12 MFG DATE

CHKD DATE APPVL DATE

DIVISION | DIVISION CODE

DO NOT SCALE DRAWING | SCALE 5/1

TOLERANCES EXCEPT AS NOTED

INCHES: .0 ± .1; .00 ± .02; .000 ± .005; .0000 ± .0002

MILLIMETERS: .0 ±; .00 ±; .000 ±

ANGLES ± 1°

THIRD ANGLE PROJECTION

INTERPRET PER ASME Y14.5 - 1994

MAX SURFACE ROUGHNESS 125 ☐ ALL SURFACES ☒ MARKED ONLY

3M 3M Center St. Paul, MN 55144

© 3M COPYRIGHT 2012
This document is the copyrighted property of the 3M Company and may not be reproduced without 3M written permission or used for other than 3M authorized purposes.

TITLE: QFN TEST SOCKET 0.5mm 16 POS, EVEN ROW, 3X3 PKG WITH TP

CAGE NUMBER | SIZE C | DRAWING NO. 78-5100-2518-8 | REV. A

MODEL TEXTOOL - QFN | DET. LISTS ☐ YES ☒ NO | SHT 2 OF 2

REVISION A

DRAWING NUMBER 78-5100-2518-8