D1RFRD006

REVISION RECORD				
REV	ECO	DESCRIPTION	DRFT	CHKD
1		MODIFY DRAWING	CZH 3/25/03'	
2		DESIGN MODIFY	Synge 8/6/2003	
3		ADD PART NO	Waters 10/08/03	
4		Add View	SAMMY 12/25/03	
5		Add NEW P/N	XIF 4/03/04"	
6		ADD PART NO	SHE 07/13/04'	
7		MODIFY DRAWING	SHE 11/15/04'	
8		MODIFY DRAWING	QIULER 02/18/05	

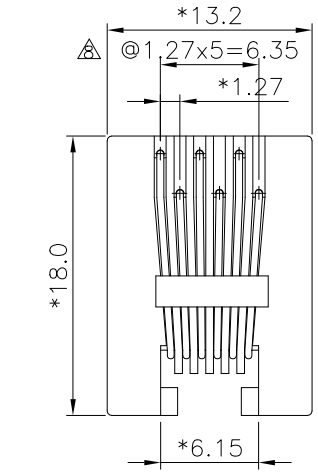

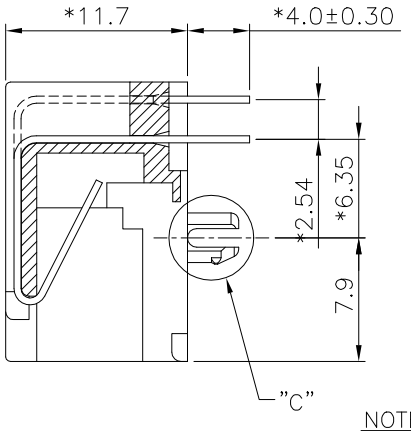

SECTION A–A

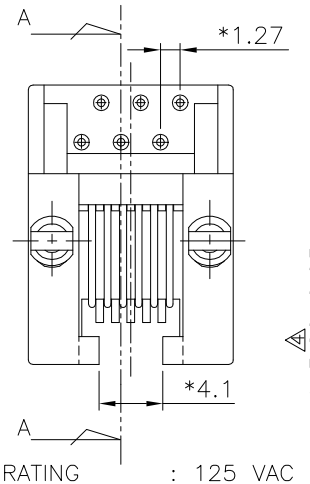

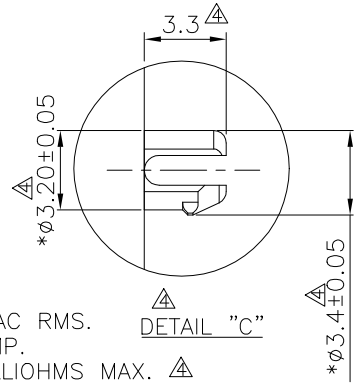

DETAIL "C"

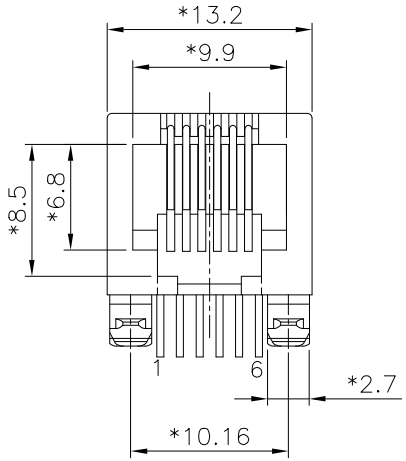

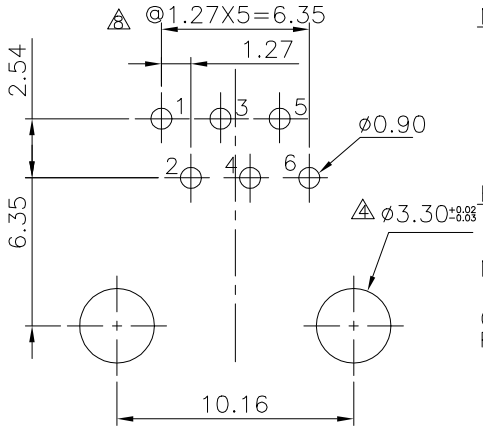

PC Board Layout

Component Side Shown

NOTES:

ELECTRICAL:

1. VOLTAGE RATING : 125 VAC RMS.
2. CURRENT RATING : 1.5 AMP.
3. CONTACT RESISTANCE : 30 MILLIOHMS MAX. 4
4. INSULATION RESISTANCE: 1000 MEGOHMS MIN @ 1000 VDC.
5. DIELECTRIC STRENGTH : 1000 VAC RMS 60Hz, 1MIN.

MECHANICAL:

1. HOUSING MATERIAL : GLASS FILLED POLYESTER UL94V–0.
2. CONTACT MATERIAL : PHOSPHOR BRONZE ø0.46mm.
3. PLATING : GOLD PLATING OVER NICKEL.
4. OPERATING LIFE : 750 CYCLES MIN.
5. PCB RETENTION PRE–SOLDER : 1 LB MIN.
6. PCB RETENTION POST–SOLDER: 10 LBS MIN.

ENVIRONMENTAL:

1. STORAGE : –40°C TO +85°C.
2. OPERATION: 0°C TO 70°C.

MATES WITH MODULAR PLUG CONFORMING TO FCC PART 68, SUBPART F.

CUL FILE NO. E163191

PART NUMBER: E536X–000X1X

- X (2–6): 2– 2C, 4– 4C, 6– 6C
- X (0–5): 0– A06–0100 BK, 1– A06–0110 GY, 4– A05–0040 BK, 5– A05–0130 BK
- X (1–G): 1– 3u" 2– 6u" 3–15u", 4– 30u" 5–50u", G – 2u" 3, F – GOLD FLASH

LEAD FREE PART NUMBER: E536X–00051X–L

- X (2–6): 2– 2C, 4– 4C, 6– 6C
- X (1–4): 1– 3u" 2– 6u" 3–15u", 4– 30u" 5–50u"
- FR52 BK

MM (INCH)	DFTO LGY	DATE 3/10/03	FULL RISE ELECTRONIC CO., LTD
TOLERANCES EXCEPT AS NOTED	CHKD LIUXIN	DATE 2005/2/18	
MM .0 ±0.20 ± .00 ±0.15 ± .000 ±0.075 ±	MFO	DATE	TITLE 90° VERY L/P PCB JACK 6P
	APPV LLUSHENG	DATE 2005/2/18	
ANGLES ±	MATERIAL :		DRAWING NO. GE533077 / PART NO. SEE NOTE — SIZE A3 — REV 8
THIRD ANGLE PROJECTION	QT'Y :		
	FINISH :		
DETACHED LISTS	SCALE : 2.5:1		DO NOT SCALE DRAWING — SHEET X OF Y