## LOADING PATTERN MATING SIDE

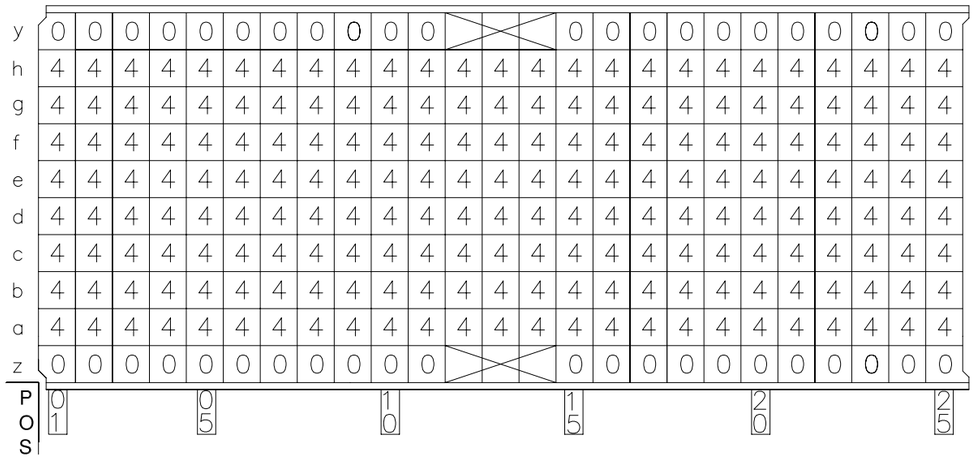


## LOADED CONNECTOR ASSEMBLY
(FOR EXAMPLE)

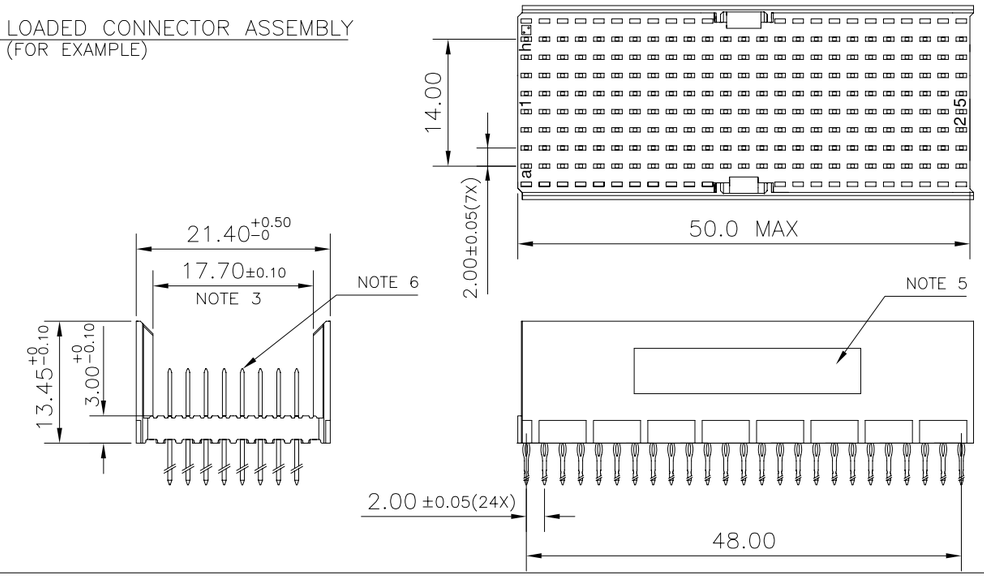


## CONTACT OVERVIEW

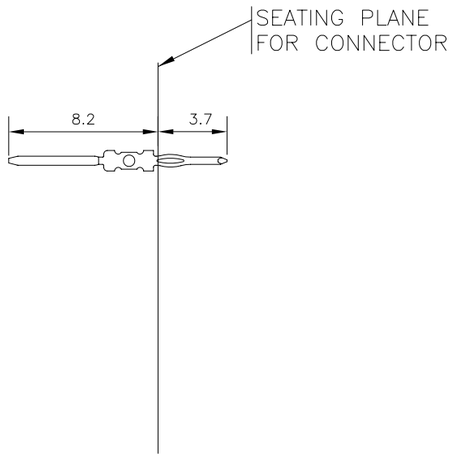


HM2P95PA8110----

LEAD FREE INDICATOR : LF = LEAD FREE
(DIGIT 15 & 16)

PLATING CODE (DIGIT 13 AND 14)

## PLATING TABLE

| CODE | PLATING | CONTACT AREA | TYPE OF TERMINAL | PERFORMANCE LEVEL |
|---|---|---|---|---|
| AA | 0.75µ Au | GOLD OVER NICKEL PLATING. | SHORT TERMINAL EON PRESSFIT CONTACTS | IEC PERFORMANCE LEVEL 2 (250 mating cycles) or TELCORDIA CO |
| AB | 1.25µ Au | GOLD OVER NICKEL PLATING. | SHORT TERMINAL EON PRESSFIT CONTACTS | TELCORDIA UE |

## LAY-OUT P.C.B.-HOLE

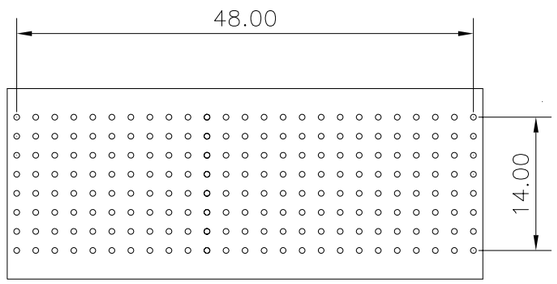


## NOTES

1. THIS PRODUCT IS CSA APPROVED.
2. THIS PRODUCT IS UL RECOGNIZED.
3. MEASURED AT THE BOTTOM.
4. MATERIAL CONTACT: PHOSPHOR BRONZE
   HOUSING : CREAM WHITE GLASS FILLED POLYESTER UL-94V0
5. CONNECTOR PRINTED WITH P/N AND DATE CODE.
6. FOR ACTUAL CONTACT LOADINGS, SEE LOADING PATTERN MATING SIDE.
7. SHAPE OF CONNECTOR HOUSING CAN ALTER DEPENDING ON PRODUCTION LOCATION
8. THE PRODUCT (LF) MEETS EUROPEAN UNION DIRECTIVES AND OTHER COUNTRY REGULATIONS AS DESCRIBED IN GS-22-008
9. FOR RECOMMENDED PTH DIMENSIONS REFER DRAWING : BS, A , 201572 , 001

CATALOG NO: HM2P95PA8110----

| ltr | ecn no | dr | date |
|---|---|---|---|
| A | 109-0210 | MINI | 2009-10-06 |
| B | 109-0290 | AB | 2009-12-29 |
| C | 110-0018 | MINI | 2010-01-13 |

| | | |
|---|---|---|
| dr | MINI K VANDANATH | 2009-10-06 |
| engr | ALEX BABU | 2009-10-06 |
| chr | ALEX BABU | 2009-10-06 |
| appd | ALEX BABU | 2009-10-06 |

mat'l. code: SEE NOTE 4
surface: ISO 1302
tolerance: ISO 406 ISO 1101
tolerances unless otherwise specified: angles 0°±1°; linear .0±0.2; .00±0.1
projection
MM
scale –
product family: MILLIPACS
title: MPACS 8+2R STR HDR PF CONN TYPE DE
dwg no: BS, C , 203032, 019
sheet 1 of 1
size A3
type: Product Customer Drawing
sheet index: revision C; sheet 1

form: A3

PDM: Rev:C STATUS:Released Printed: Jan 20, 2010

FCIconnect.com
Copyright FCI