DRAWING MADE IN THIRD ANGLE PROJECTION

680078 ⇔ 680078

/home/us016926/DMTECmod

PART NUMBER	REV	FIRST USED
680078-1	P	854400-1
680078-2	N	565435-5
680078-3	P	354500-1
680078-4	N	565435-5
680078-5	P	854400-1

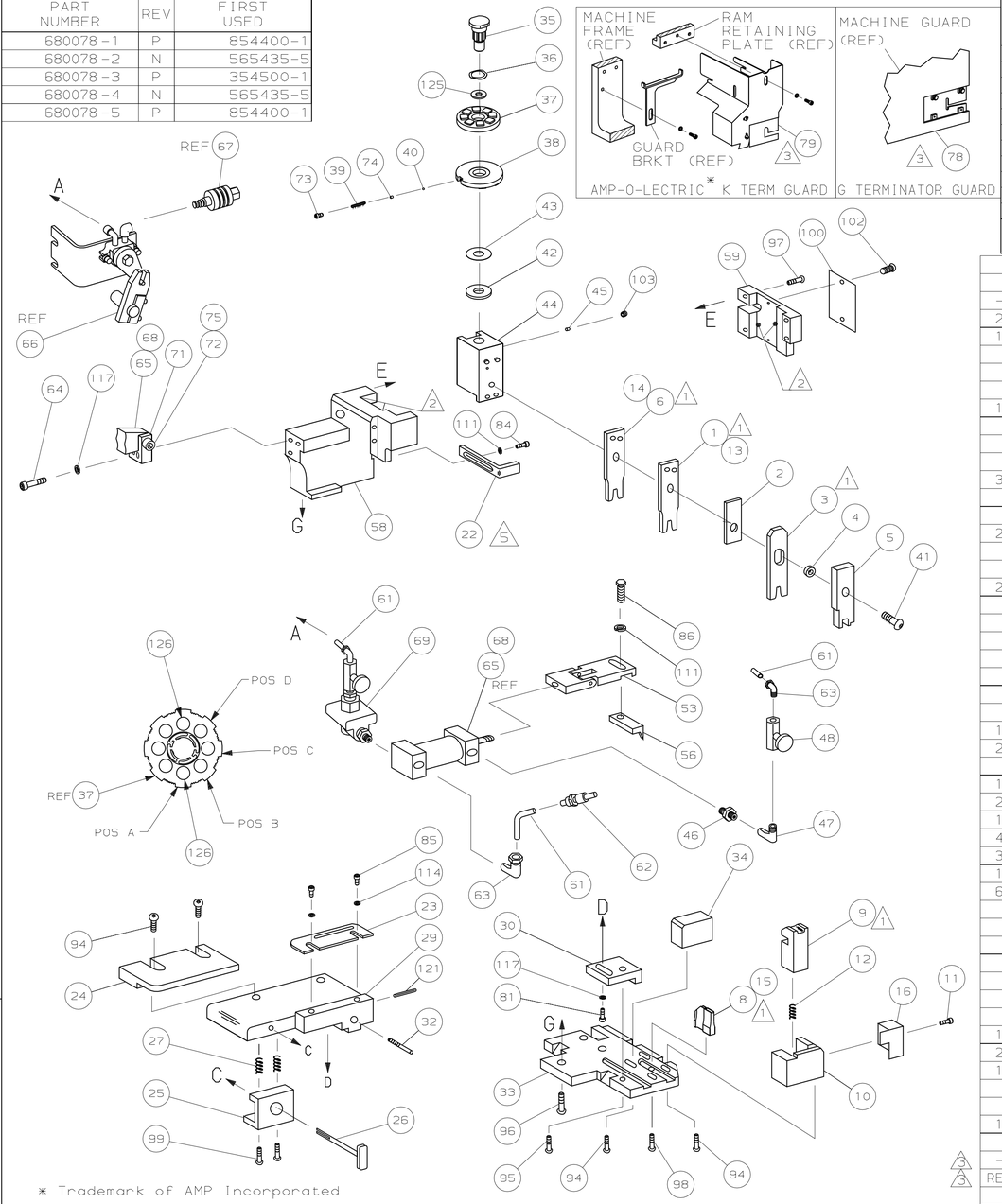

TERMINAL NAME: AMP-IN™ 794037 △6	CRIMPING DATA FOR -1, -2 & -3				CRIMPING DATA FOR -4 & -5			
	PAD LETTER	STABILIZER CRIMP HEIGHT		WIRE SIZE	PAD LETTER	STABILIZER CRIMP HEIGHT		WIRE SIZE
	A	.110±.002 △8		12	A	.110±.002 △8		10
	B	NOT		USED	B	NOT		USED
	C	NOT		USED	C	NOT		USED
	D	NOT		USED	D	NOT		USED
	CRIMP	SIZE	TYPE	RANGE	CRIMP	SIZE	TYPE	RANGE
	NOSE	.110	F	12	NOSE	.140	F	10
	STABILIZER	.110	O	12	STABILIZER	.140	O	10
	INSULATION	.210	O	.200 MAX	INSULATION	.210	O	.200 MAX

WIRE STRIP LENGTH	TERM APPL SPEC	FEED	APPL INST	SET UP GAGE	LAYOUT
.205-.220	114-1016	.560	408-8040	458637-1	L1559

-5	-4	-3	-2	-1	U/M	DWG SIZE	PART NO	DESCRIPTION	ITEM NO
									129
									128
-	-	2	2	2	-	C	1-354778-9	PIN, WIRE DISC (.2590)A	127
2	2	-	-	-	-	C	3-354778-1	PIN, WIRE DISC (.2650)A	126
1	1	1	1	1	-	A	986950-1	WASHER, FLAT PRECISION	125
									124
									123
									122
1	1	1	1	1	-	A	4-21028-0	PIN,SLT SPR(ø.093x.75)ST GDE PL	121
									120
									119
									118
3	3	3	3	3	-	A	21024-5	WASHER, LOCK(#10)ADJ BLOCK	117
									116
									115
2	2	2	2	2	-	A	21024-2	WASHER,LOCK(#4)FRONT STP GUIDE	114
									113
									112
2	2	2	2	2	-	A	21024-4	WASHER,LOCK(#8)STRIPPER	111
									110
									109
									108
									107
									106
									105
									104
1	1	1	1	1	-	A	21009-2	SCR,SKT SET(1/4-20x.25 LW)RAM	103
2	2	2	2	2	-	A	21017-2	SCR,DRIVE(#2x.19)ID PLATE	102
									101
1	1	1	1	1	-	B	461264-1	PLATE, IDENTIFICATION	100
2	2	2	2	2	-	A	3-21002-0	SCR,BHC(10-32x.88)DRAG	99
1	1	1	1	1	-	A	22733-8	SCR,BHC(8-32x.38 LW)ANVIL	98
4	4	4	4	4	-	A	2-21002-9	SCR,BHC(10-32x.75)CAP	97
3	3	3	3	3	-	A	2-22733-8	SCR,BHC(1/4-20x.62)HSG	96
1	1	1	1	1	-	A	2-21002-7	SCR,BHC(10-32x.50)SG ADJ BLK	95
6	6	6	6	6	-	A	2-21002-2	SCR,BHC(8-32x.50)SHEAR	94
									93
									92
									91
									90
									89
									88
									87
1	1	1	1	1	-	A	2-22603-1	SCR,HEX HD(8-32x.38)FEED FINGER	86
2	2	2	2	2	-	A	1-21000-3	SCR,SHC(4-40x.25)F ST GUIDE	85
1	1	1	1	1	-	A	2-21000-7	SCR,SHC(8-32x.50)STRIPPER	84
									83
									82
1	1	1	1	1	-	A	3-21000-4	SCR,SHC(10-32x.38)SG ADJ BL	81
									80
△3 -	1	-	1	-	-	B	462992-7	GUARD ASSY	79
△3 REF	REF	REF	-	-	-	B	679532-1	INSERT, GUARD	78
									77
									76
1	1	1	1	1	-	A	21024-8	WASHER, LOCK (3/8)	75
1	1	1	1	1	-	A	690603-1	SPRING, ASSIST	74
1	1	1	1	1	-	A	23030-1	SCR,SHC(6-32x.25 SL)INS DISC	73
1	1	1	1	1	-	A	3-21001-4	SCR,SHC(3/8x.88)FEED MT	72
1	1	1	1	1	-	B	459610-3	MOUNT, FEED BRACKET	71
-5	-4	-3	-2	-1	U/M	DWG SIZE	PART NO	DESCRIPTION	ITEM NO

QTY REQD PER ASSY — PARTS LIST — REVISION OF EACH ASSY NO (WHEN BLANK, USE DWG REVISION)

	-1	LEADMAKER	AIRFEED D. A.	-3	BENCH MODEL G	AIRFEED
	-2	BENCH MODEL K	AIRFEED	-4	BENCH MODEL K	AIRFEED
				-5	LEADMAKER D.A.	AIRFEED

-5	-4	-3	-2	-1	U/M	DWG SIZE	PART NO	DESCRIPTION	ITEM NO
									70
△4 -	1	-	1	-	-	C	692655-5	AIR FEED VALVE ASSY	69
△4 -	1	1	1	-	-	B	461065-1	AIR FEED ASSEMBLY	68
-	-	-	REF	-	-	A	24042-2	VALVE, SHUT OFF	67
△4 -	-	-	REF	-	-	C	692655-6	AIR FEED VALVE ASSY	66
△4 1	-	-	-	1	-	B	461065-4	AIR FEED ASSEMBLY	65
2	2	2	2	2	-	A	3-21000-9	SCR,SHC 10-32x1.00 AIR ASSY	64
2	-	1	-	2	-	A	980285-2	ELBOW, TUBING 1/8 NPT	63
2	-	1	-	2	-	A	23238-1	QUICK DISCONNECT	62
42.00	21.00	21.00	21.00	42.00	IN	A	27319-4	TUBING, POLY-FLO ø.25	61
									60
1	1	1	1	1	-	C	454220-1	CAP, RAM	59
1	1	1	1	1	-	D	454485-1	HOUSING	58
									57
1	1	1	1	1	-	B	458537-2	PAWL, FEED	56
									55
									54
△4 1	1	1	1	1	-	B	461062-1	FEED FINGER ASSY	53
									52
									51
									50
									49
1	-	-	-	1	-	A	23054-1	FLOW CONTROL VALVE	48
1	-	-	-	1	-	A	22306-1	90° ELBOW, 1/8 X 1/8	47
1	-	-	-	1	-	A	22304-1	NIPPLE, 1/8 X 1/8	46
1	1	1	1	1	-	A	690191-1	PLUG, NYLON	45
1	1	1	1	1	-	C	455673-5	RAM	44
1	1	1	1	1	-	A	690125-1	WASHER, LAMINATED	43
1	1	1	1	1	-	A	1-690124-0	WASHER, RAM	42
1	1	1	1	1	-	A	7-21002-9	BOLT, CRIMPER(5/16x1.00)	41
1	1	1	1	1	-	A	23241-6	BALL, STEEL	40
1	1	1	1	1	-	A	690170-1	SPRING, COMPRESSION	39
1	1	1	1	1	-	C	690142-5	DISC, INSULATION	38
1	1	1	1	1	-	D	354777-1	WIRE DISC, PLASTIC	37
1	1	1	1	1	-	A	22480-5	WASHER, SPRING	36
1	1	1	1	1	-	B	690212-1	POST, RAM	35
1	1	1	1	1	-	B	469465-1	STOP, WIRE	34
1	1	1	1	1	-	D	455675-1	PLATE, BASE	33
1	1	1	1	1	-	A	690432-3	SCREW, ADJUSTMENT	32
									31
1	1	1	1	1	-	B	455689-1	BLOCK, STRIP GUIDE ADJ	30
1	1	1	1	1	-	C	455671-1	PLATE, STRIP GUIDE	29
									28
2	2	2	2	2	-	A	1-22284-0	SPRING, DRAG	27
1	1	1	1	1	-	B	690546-1	LEVER, DRAG RELEASE	26
1	1	1	1	1	-	B	240792-1	DRAG, TERMINAL	25
1	1	1	1	1	-	D	6-690440-5	GUIDE, STRIP (REAR)	24
1	1	1	1	1	-	A	690438-1	GUIDE, STRIP (FRONT)	23
△5 1	1	1	1	1	-	B	1-690472-3	STRIPPER	22
									21
									20
									19
									18
									17
1	1	1	1	1	-	B	318563-1	GUARD, CHIP (FRONT)	16
1	1	-	-	-	-	C	2-189717-4	ANVIL	15
1	1	-	-	-	-	C	224908-1	CRIMPER, WIRE (NOSE)	14
1	1	-	-	-	-	C	224907-1	CRIMPER, STABILIZER	13
1	1	1	1	1	-	A	5-22280-0	SPRING, SHEAR	12
1	1	1	1	1	-	B	690461-7	STOP, SHEAR	11
1	1	1	1	1	-	C	1-690459-0	HOLDER, SHEAR (FRONT)	10
△1 1	1	1	1	1	-	C	454276-5	SHEAR, FLOAT (FRONT)	9
△1 -	-	1	1	1	-	C	8-854014-8	ANVIL	8
									7
△1 -	-	1	1	1	-	C	4-456408-4	CRIMPER, WIRE (NOSE)	6
1	1	1	1	1	-	C	2-455889-1	DEPRESSOR, SHEAR (FRONT)	5
1	1	1	1	1	-	B	238011-8	SPACER, BLOCK CRIMPER	4
△1 1	1	1	1	1	-	C	4-683454-2	CRIMPER, INSULATION	3
1	1	1	1	1	-	C	455888-6	SPACER, CRIMPER	2
△1 -	-	1	1	1	-	C	815664-2	CRIMPER, STABILIZER	1
-5	-4	-3	-2	-1	U/M	DWG SIZE	PART NO	DESCRIPTION	ITEM NO

QTY REQD PER ASSY — PARTS LIST — REVISION OF EACH ASSY NO (WHEN BLANK, USE DWG REVISION)

* Trademark of AMP Incorporated

△1 RECOMMENDED SPARE PARTS.

△2 GREASE LIGHTLY.

△3 GUARD MUST BE IN PLACE WHEN OPERATING APPLICATOR IN A BENCH MACHINE.

△4 SEE DRAWING FOR COMPONENTS

△5 LOCATE ITEM 22 BETWEEN ITEM 1 & ITEM 3.

△6 FOR USE IN PRINTED CIRCUIT BOARD WITH A ø.125 HOLE FOR #12 WIRE, ø.145 HOLE FOR #10 WIRE.

7 CRIMP HEIGHT CAN NOT BE MEASURED FOR INSULATION ON #10 WIRE SINCE INS BARREL WILL NOT COMPLETELY SURROUND IT.

△8 CRIMP HEIGHT TO BE MEASURED OVER CENTER BARREL (STABILIZER). NOSE CRIMP HEIGHT TO BE .095±.002 FOR 12 GA WIRE .108±.002 FOR 10 GA WIRE. SEE CHART BELOW

APPLICATOR PN	CRIMP SIZE	NOSE CRIMP HEIGHT	WIRE SIZE
680078-1,-2 &-3	.110 - F	.095	12
680078-4 & -5	.140 - F	.108	10

9 NO BELLMOUTH PERMISSIBLE.

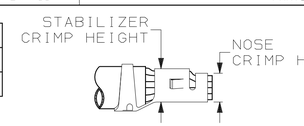

P	F	LTR	REVISION RECORD	APP	DATE
		-	-	-	-
		-	-	-	-
		-	-	-	-
		P	ECR-05-014696	GB	11-05
		N	ECR 05-003644	TE	5-05
		M	ECN 0150-06B4-04	TE	5-04
		L1	0150-1507-02	RK	NOV02
		L	ECN 0150-0262-00	TE	4-00
		K	0150-8254-98	TB	1-98

DIMENSIONS IN INCHES. DO NOT SCALE PRINT. TOLERANCES UNLESS OTHERWISE SPECIFIED: 2 PLC DEC ±.25, 3 PLC DEC ±-, 4 PLC DEC ±-, ANGLES ± -, SURF TEXTURE: √. REMOVE BURRS, BREAK SHARP EDGES R.015 MAX

MATL - HT TR - FIN -

DR JC BAKER 3/7/94 APP BA WOLFE 3/8/94

CHK C.ERISMAN 3/8/94 REL B. MORGAN 3/25/94

AMP Incorporated Harrisburg, PA 17105-3608

NAME SIDE FEED HDM APPLICATOR — MACHINE REF MINI APPL

SCALE - D DWG NO 680078 SHEET 1 OF 1 REV P

CAGE CODE 00779 — CUSTOMER AND ASSEMBLY DRAWING — RESTRICTED TO -

THIS DRAWING IS A CONTROLLED DOCUMENT.
RELEASED FOR PUBLICATION JUN 26, 1999
BY AMP INCORPORATED. ALL RIGHTS RESERVED.
© COPYRIGHT 1999

LOC A DIST 66

AMP 1756 REV 3-92 02-NOV-05 12:58:17 us016926