THIS DRAWING IS UNPUBLISHED. RELEASED FOR PUBLICATION 20
© COPYRIGHT 20 BY TYCO ELECTRONICS CORPORATION. ALL RIGHTS RESERVED.

LOC	DIST
A	66

REVISIONS

P	LTR	DESCRIPTION	DATE	DWN	APVD
	A	RELEASED	01FEB2007	ROW	TE

PART NUMBER	REV	FIRST USED	POWER UNIT	FEED TYPE
1852398-1	A	122500-1	LEADMAKER & BENCH MODEL G	POST FEED
1852398-2	A	565435-5	BENCH MODEL K	POST FEED
7-1852398-7	A	-	SPARE PARTS	-

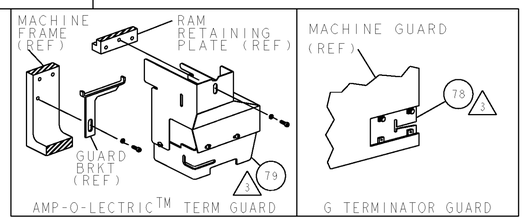

TERMINAL NAME: LANGUETTE, 2.8mm					
-	1544508	AMP TERMINAL - AMP CRIMP SPECS			
-	-				
-	-	PAD LTR	CRIMP HEIGHT		WIRE SIZE
-	-	A	1.27±0.05mm[.050±.002]		1.00mm2
-	-	B	1.17±0.05mm[.046±.002]		0.75mm2
-	-	C	1.07±0.05mm[.042±.002]		0.5mm2
-	-	D	.94±0.05mm[.037±.002]		0.22mm2
-	-	CRIMP	SIZE	TYPE	RANGE
-	-				
-	-	WIRE	1.79mm [.070]	F	0.22-1.0mm2
-	-	INSUL	2.54mm [.100]	F	Ø1.40-2.60mm
WIRE STRIP LENGTH 4.0-4.8mm	TERM APPL SPEC 114-15100	FEED 18.1mm	APPL INSTRUCTIONS 408-8039	SET UP GAGE 458638-1	

1 RECOMMENDED SPARE PARTS

2 GREASE LIGHTLY

3 GUARD MUST BE IN PLACE WHEN OPERATING APPLICATOR IN A BENCH MACHINE

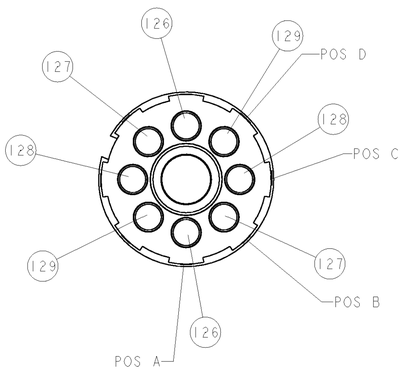

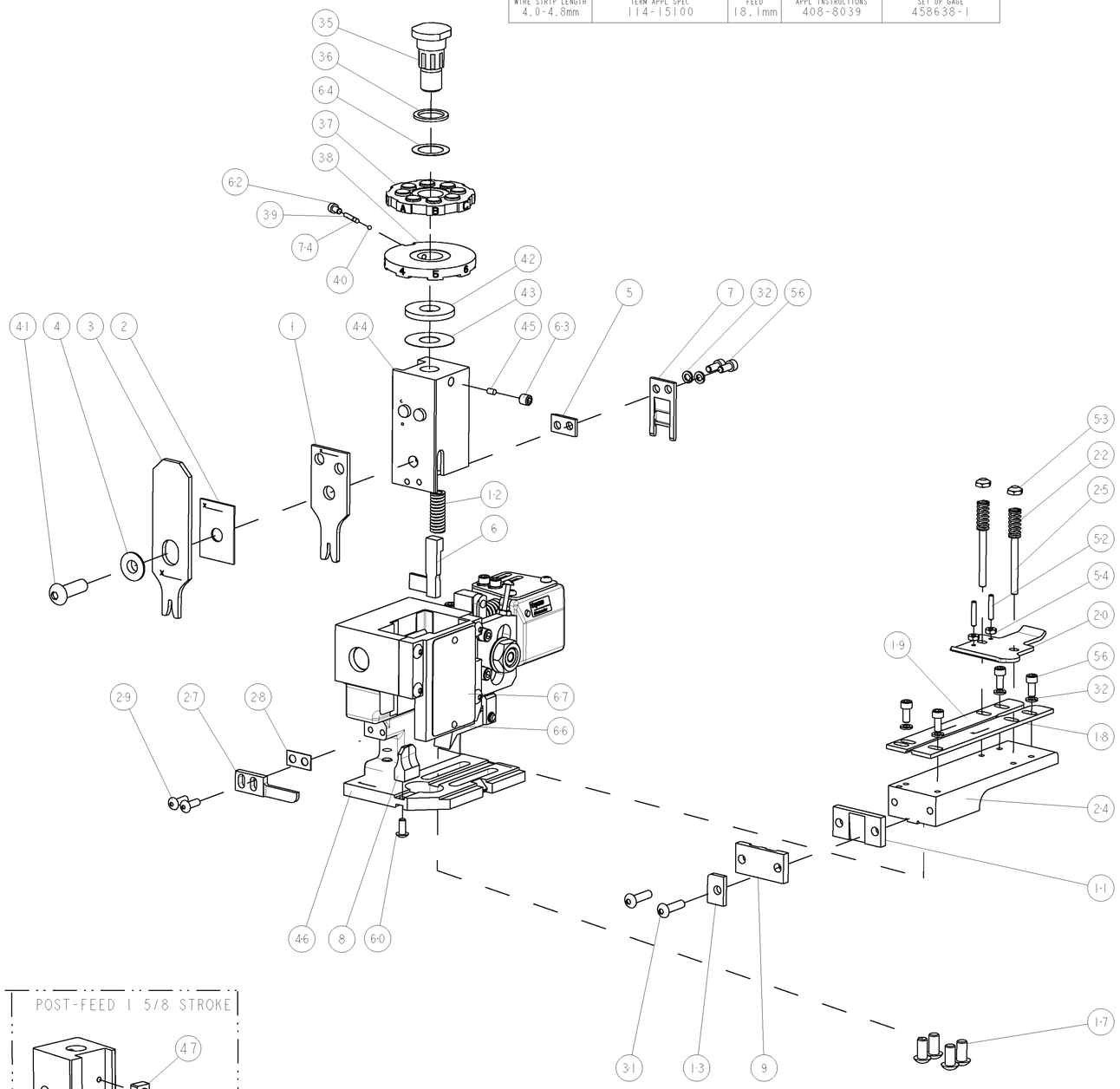

	-	2	2	-	354779-6	PIN, WIRE DISC, .3020	129
	-	2	2	-	9-354778-4	PIN, WIRE DISC, .2965	128
	-	2	2	-	8-354778-5	PIN, WIRE DISC, .2920	127
	-	2	2	-	7-354778-5	PIN, WIRE DISC, .2870	126
3	-	REF	-	..	455745-1	GUARD WINDOW	79
3	-	-	REF	..	679532-1	INSERT, GUARD	78
	-	1	1	-	690603-1	SPRING ASSIST AMP-O-MATOR APPLICATOR	74
	-	1	1	-	217238-1	GENERAL INSTRUCTION PKG	72
	-	1	1	-	4088039	EF APPL INST 408-8039	71
	-	1	1	-	461264-1	PLATE, IDENTIFICATION	67
	-	2	2	-	21017-2	SCREW, DRIVE	66
	-	1	1	-	986950-1	WASHER, FLAT PRECISION	64
	-	1	1	-	21009-2	SCR, SET, SELF LOCKING 1/4-20 X .250	63
	-	1	1	-	23030-1	SCR, SKT HD CAP 6-32 x .25	62
	-	1	1	-	22733-8	SCR, BHSC, SELF-LOCKING, 8-32 X .375	60
	-	6	6	-	2-21000-6	SCR, SKT HD CAP 8-32 X .375	56
	-	2	2	-	21018-4	NUT, HEX, REG 4-40	54
	-	2	2	-	21022-2	NUT, LOCK, HEX, TORQUE, 8-32	53
	-	2	2	-	2-21006-6	SCR, SET, CUP POINT 4-40 X .625	52
	-	1	1	..	1-21002-7	SCR, BTN SKT CAP 6-32 X .375	49
	-	1	-	..	690501-3	CAM, POST FEED, 1 1/8	48
	-	-	1	-	690501-4	CAM, POST FEED, 1 5/8	47
	-	1	1	-	458980-1	SUB ASSY, APPLICATOR FRAME	46
	-	1	1	-	690191-1	PLUG,NYLON	45
	-	1	1	-	455674-1	RAM	44
	-	1	1	-	690125-1	SHIM SUB-ASSY	43
	-	1	1	-	690124-4	WASHER, RAM (.135)	42
	-	1	1	-	7-21002-9	SCR, BTN SKT HD CAP 5/16-24 X 1.00	41
	-	1	1	-	23241-6	BALL, STEEL	40
	-	1	1	-	690170-1	SPRING, COMPRESSION	39
	-	1	1	-	690142-4	DISC, INSULATION	38
	-	1	1	-	354777-1	WIRE DISC, ASSEMBLY	37
	-	1	1	-	22480-5	SPRING, COMPRESSION	36
	-	1	1	-	690212-1	POST, RAM	35
	-	6	6	-	21024-4	WASHER, SPRG LOCK, REG NO 8	32
	-	2	2	-	2-21002-9	SCR, BTN SKT HD CAP 10-32 X .750	31
	-	2	2	-	2-21002-2	SCR, BTN SKT HD CAP 8-32 X .500	29
	-	1	1	-	1-690451-7	SPACER, STRIPPER	28
	-	1	1	-	240639-1	STRIPPER (MACHINING)	27
	-	2	2	-	22354-8	STUD, THREADED	25
	-	1	1	-	455678-1	PLATE, STRIP GUIDE	24
	-	2	2	-	4-22281-1	SPRING, DRAG	22
	-	1	1	-	454177-1	DRAG	20
	-	1	1	-	1-458030-1	STRIP GUIDE, REAR	19
	-	1	1	-	1-458031-1	STRIP GUIDE, FRONT	18
	-	4	4	-	3-21002-3	SCR, BTN SKT HD CAP 1/4-20 X .500	17
	-	1	1	-	690481-7	SPACER, HOLD DOWN	13
	-	1	1	-	23846-1	SPRING, DIE	12
1	-	1	1	-	240644-1	PLATE, REAR SHEAR	11
1	-	1	1	-	690482-6	PLATE, FRONT SHEAR	9
1	1	1	1	-	1-1633249-3	ANVIL, COMBINATION	8
1	-	1	1	-	690474-6	BLADE, SLUG	7
	-	1	1	-	7-455892-9	HOLD DOWN, TERMINAL	6
	-	1	1	-	3-240641-7	SPACER	5
	-	1	1	-	238009-1	BLOCK, FL CRIMPER SPACER	4
1	1	1	1	-	2-1424909-9	CRIMPER, INSULATION F	3
	-	1	1	-	1-455888-0	SPACER, CRIMPER	2
1	1	1	1	-	3-456404-0	CRIMPER, WIRE PREMIUM	1
	-77	-2	-1	U/M	PART NO	DESCRIPTION	ITEM NO

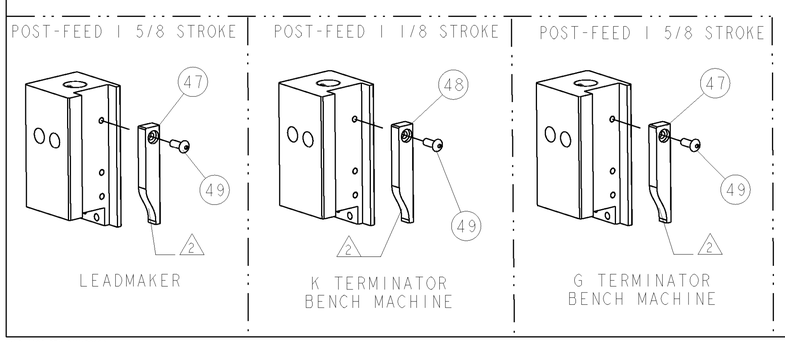

THIS DRAWING IS A CONTROLLED DOCUMENT FOR TYCO ELECTRONICS CORPORATION IN IT SUBJECT TO CHANGES. INFORMATION ON THIS DRAWING IS PROPRIETARY AND SHOULD BE CONTACTED FOR THE LATEST REVISION.

DWN	R.O.WILSON	11JAN2007
CHK	R.O.WILSON	11JAN2007
APVD	T.ELBIN	12JAN2007

tyco Electronics — Tyco Electronics, Harrisburg, PA 17105-3608

DIMENSIONS: INCHES

TOLERANCES UNLESS OTHERWISE SPECIFIED:

0 PLC	±
1 PLC	±0.1
2 PLC	±0.01
3 PLC	±0.001
4 PLC	±0.0001
ANGLES	±

MATERIAL - -

FINISH - -

PRODUCT SPEC -

APPLICATION SPEC -

WEIGHT -

NAME: END FEED HDM APPLICATOR - -

SIZE	CAGE CODE	DRAWING NO	RESTRICTED TO
A1	00779	C-1852398	-

CUSTOMER DRAWING | SCALE 3:5 | SHEET 1 OF 1 | REV A

CUSTOMER VIEWABLE ASSEMBLY

AMP 4805 REV 31MAR2000

Pro/ENGINEER DRAWING