DWG. NO. SD-54526-001

番号 No.	部品 PART NAME	材質 MATERIAL	仕上げ FINISH
①	リセプタクル ハウジング RECEPTACLE HOUSING	液晶ポリマー、ガラス充填、自然色（白）、UL94V-0 LCP , GLASS FILLED , NATURAL(WHITE) , UL94V-0	—//—
②	リセプタクル ターミナル RECEPTACLE TERMINAL	リン青銅 PHOSPHOR BRONZE	△1.

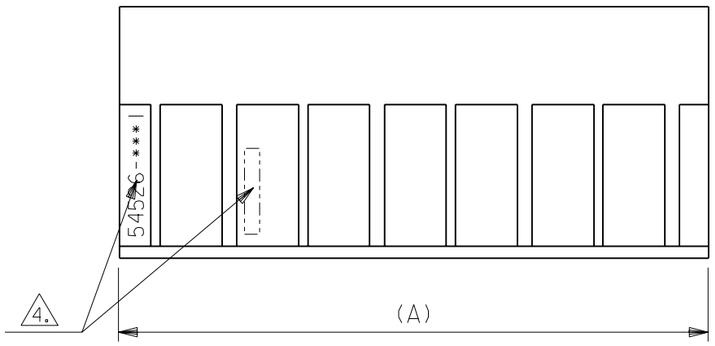

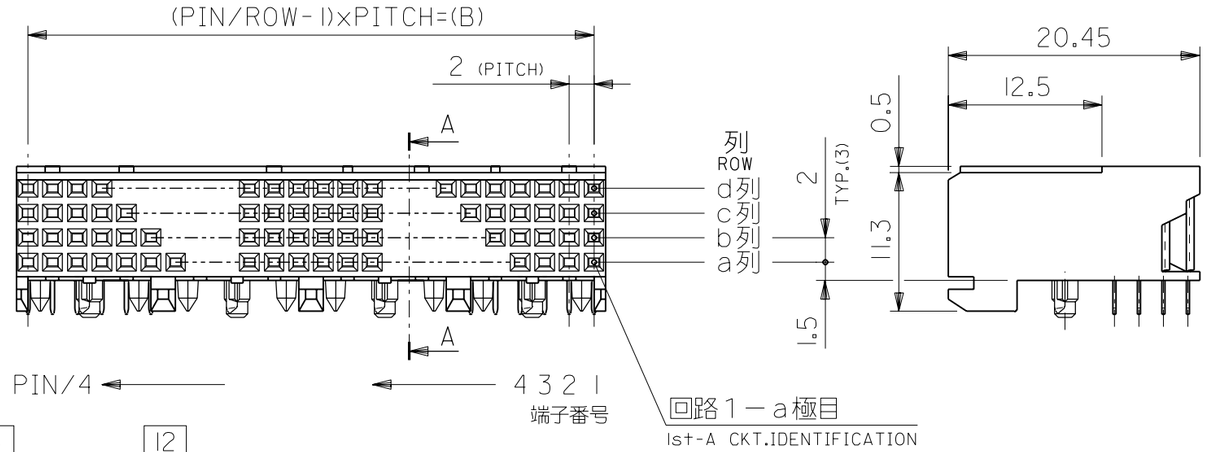

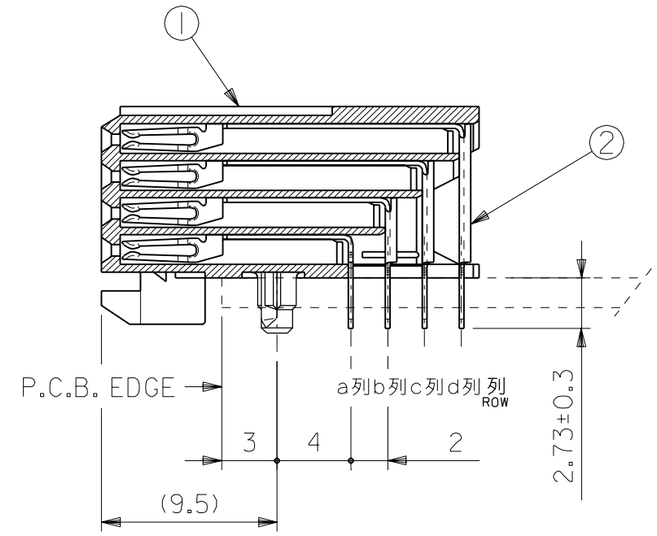

A-A
(NON-SCALE)

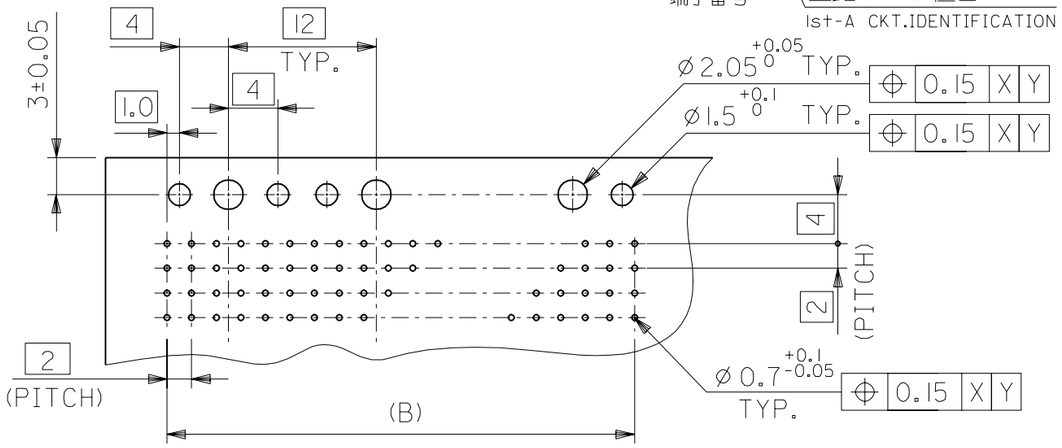

基板穴推奨寸法（部品実装）
RECOMMENDED P.C.B.LAYOUT (COMPONENT SIDE)

注記
NOTE :

△1. ターミナル めっき仕様
TERMINAL PLATING
金めっき: 0.76μ m MIN.(接点部)
GOLD : 0.76 μm MIN. (CONTACT AREA)
半田めっき : 1.0μm MIN. (半田付け部)
TIN-LEAD : 1.0μm MIN. (SOLDER AREA)
ニッケルメッキ: 2.0 μ m MIN.(下地めっき)
NICKEL : 1.0 μm MIN. (UNDER PLATING)

2. 推奨基板厚 : t=1.6
RECOMMENDED P.C.B. THICKNESS : t=1.6

3. 適合プラグ : 53901-***5, 55222-***5, 55089-***5
APPRICABLE PLUG : 53901-***5, 55222-***5, 55089-***5

△4. 製品番号及びロットナンバー
MATERIAL NO. & LOT NO.

B	A	MATERIAL NO.	PIN
94	95.98	54526-1921	192
58	59.98	54526-1201	120
46	47.98	54526-0961	96
22	23.98	54526-0481	48
10	11.98	54526-0241	24

MODEL NO. : 54526-***1

DIMENSIONS: ☐ mm/INCH ☐ INCH/mm ☒ mm ONLY
SHT REV
REVISE ON CAD ONLY

2/4 NO. DRWN: CH'K: APPR:	2/3 NO. DRWN: CH'K: APPR:	2/2 NO. DRWN: CH'K: APPR:	2/1 NO. DRWN: CH'K: APPR:	2/0 NO. DRWN: CH'K: APPR:	RELEASED JD00190 S.HOSHIKAWA '99/08/23 A.NODA H.IKESUGI
				0	REV

DESCRIPTION
MATERIAL 材料 —//—
FINISH 仕上げ —//—
WIRE RANGE 適用電線範囲 —//—
INS. RANGE 被覆外径 —//—

GENERAL TOLERANCES: (UNLESS SPECIFIED) 一般公差

10 UNDER 未満	±0.2
10 OVER 以上 30 UNDER 未満	±0.25
30 OVER 以上	±0.3
ANGLE 角度	±3°

SCALE 2-1
DESIGN UNITS ☒mm ☐INCH
THIRD ANGLE PROJECTION
DRAWN BY & DATE S.Hoshikawa
CHECKED BY & DATE A.Noda
APPROVED BY & DATE H.Ikesugi
CAD FILENAME 54526001.S01

TITLE: "MFB" B/B CONN. (FB+) REC. ASS'Y 4ROWS DIP

molex MOLEX INCORPORATED

MATERIAL NO. SEE TABLE
DRAWING NO. SD-54526-001
SHEET NO. 1 OF 1
SIZE B

THIS DRAWING CONTAINS INFORMATION THAT IS PROPRIETARY TO MOLEX INCORPORATED AND SHOULD NOT BE USED WITHOUT WRITTEN PERMISSION.

DO NOT SCALE DRAWING

54526001.S01

EN-02J(097) MXJ-54