THIS DRAWING IS UNPUBLISHED. RELEASED FOR PUBLICATION ,19 .
© COPYRIGHT 19 BY AMP INCORPORATED. ALL RIGHTS RESERVED.

LOC	DIST
AD	39

REVISIONS

P	LTR	DESCRIPTION	DATE	DWN	APVD
	0	RLSE –1 PER NPR 5307 WAS 95–2197–14–1	03–27–95	SK	SK
	A	REV PER EC 0020–0657–96	12/06/96	JR	RS
	A1	REVISED PER ECR–14–009533	07/07/14	AP	JHA

1. COORDINATE DIMENSION APPLIES FROM CENTER OF ACTUAL FEATURE.
2. LCP, BLACK
3. 2.54µm MIN TIN–LEAD ON SOLDER TAIL OVER 1.90µm MIN NICKEL ALL OVER.
4. CONTACTS: BRASS

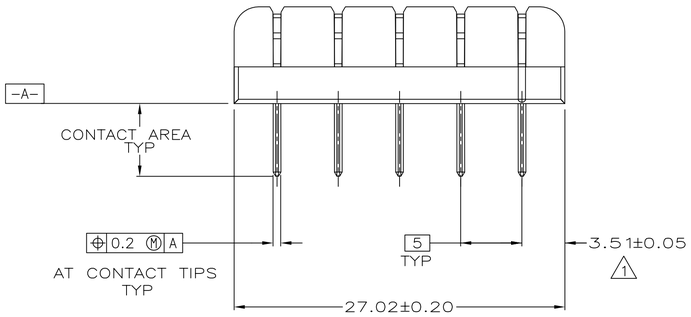

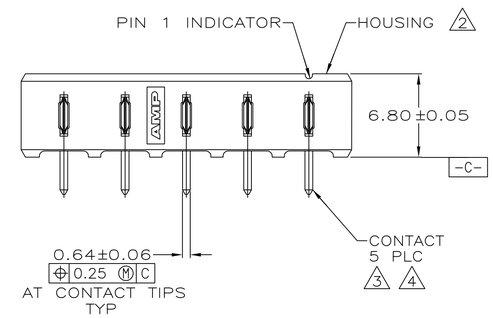

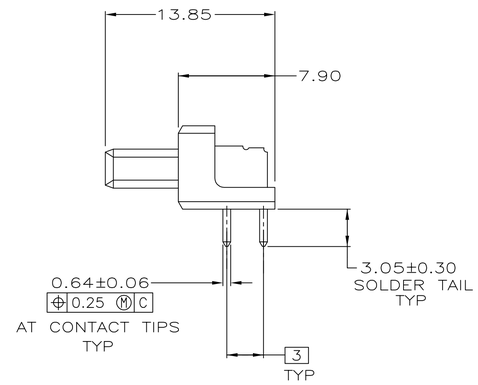

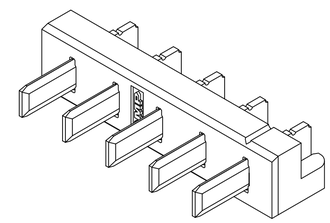

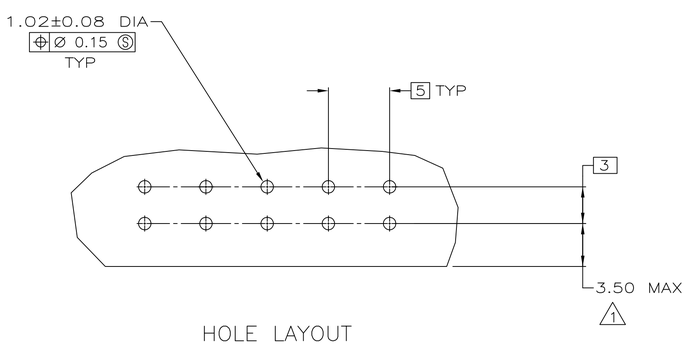

HOLE LAYOUT

SUPERCEDED BY 5787441–1	787441–1
	PART NO

THIS DRAWING IS A CONTROLLED DOCUMENT FOR AMP INCORPORATED. IT IS SUBJECT TO CHANGE AND THE CONTROLLING ENGINEERING ORGANIZATION SHOULD BE CONTACTED FOR THE LATEST REVISION.

DIMENSIONS: mm

TOLERANCES UNLESS OTHERWISE SPECIFIED:
0 PLC ±–
1 PLC ±–
2 PLC ±0.13
3 PLC ±–
4 PLC ±–
ANGLES ±–

MATERIAL: SEE CALLOUTS
FINISH: SEE CALLOUTS

DWN S.KLINE 03–27–95
CHK S.KLINE 03–30–95
APVD S.KLINE 03–30–95
PRODUCT SPEC 108–1501
APPLICATION SPEC 114–24005
WEIGHT –

TE Connectivity

NAME: HEADER ASSEMBLY, RIGHT ANGLE, KEYLESS, 5mm ℄, 5 POSN, STRAIGHT SOLDER TAILS, BATTERY INTERCONNECT

SIZE A1 | CAGE CODE 00779 | DRAWING NO C–787441

CUSTOMER DRAWING | SCALE 4:1 | SHEET 1 OF 1 | REV A1