Product NO.	BC-201-400			
REV	DESCRIPTION	DWN	DATE	APPROVEN
R1.0	First issue	Gavin	2021/03/09	JIM.KING

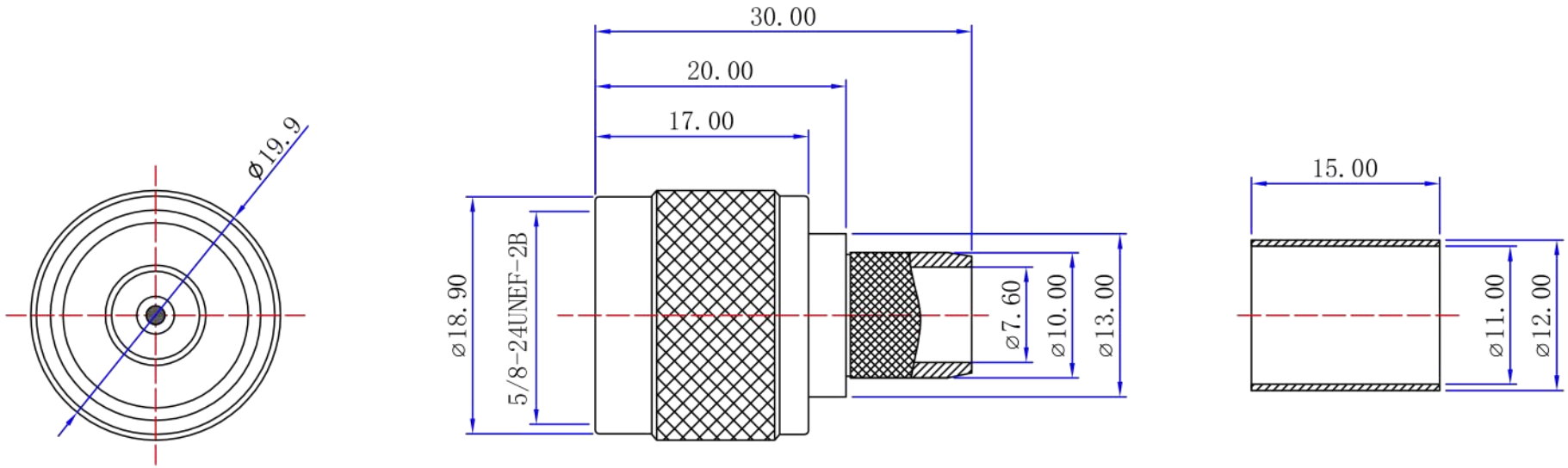

Specifications
Impedance: 50 Ohms
Frequency Range:0-6G
VSWR:1.5MAX
Working Voltage:1000 VRMS(max at sea level)
Dielectric Withstanding Voltage:1500 vrms(max at sea level)
Insulation Resistance:5000 MOhms min
Durability Mating:500 Cycles min
Temperature Range:-65℃ TO +165℃

No	Connector color
BC-201-400-RD	Body electrophoresis: Red
BC-201-400-BL	Body electrophoresis: Blue
BC-201-400-BK	Body electrophoresis: Black

NO	DESCRIPTION	MATERIAL	FINISH	QTY
4	FERRULE	BRASS	NICKEL	1
3	PIN	BRASS	GOLD	1
2	INSUKATON	PTFE	NONE	1
1	BODY	BRASS	Electrophoresis	1

-TOLERANCES-
UNLESS OTHERWISE SPECIFIED

UNLESS OTHERWISE SPECIFIED
TOLERANCES FOR MILLIMETERS ARE:
0.5 - 8mm ± 0.20mm
8 - 30mm ± 0.25mm
30 -120mm ± 0.30mm

BIG CAT CABLES

PART DESCRIPION: Male N CRIMP PLUG FOR LMR400 CABLE

Appd: JIM.KING	P/N: BC-201-400				
Check:	Date	Scale	Unit	Type	Page
Draw: Gavin	2021.03.09	Free	MM	Z	1/1