THIS DRAWING IS UNPUBLISHED. RELEASED FOR PUBLICATION -,- .
© COPYRIGHT - By - ALL RIGHTS RESERVED.

LOC	DIST
AF	50

REVISIONS

P	LTR	DESCRIPTION	DATE	DWN	APVD
	M	REVISED PER ECR-13-011489	06DEC2013	KH	PD

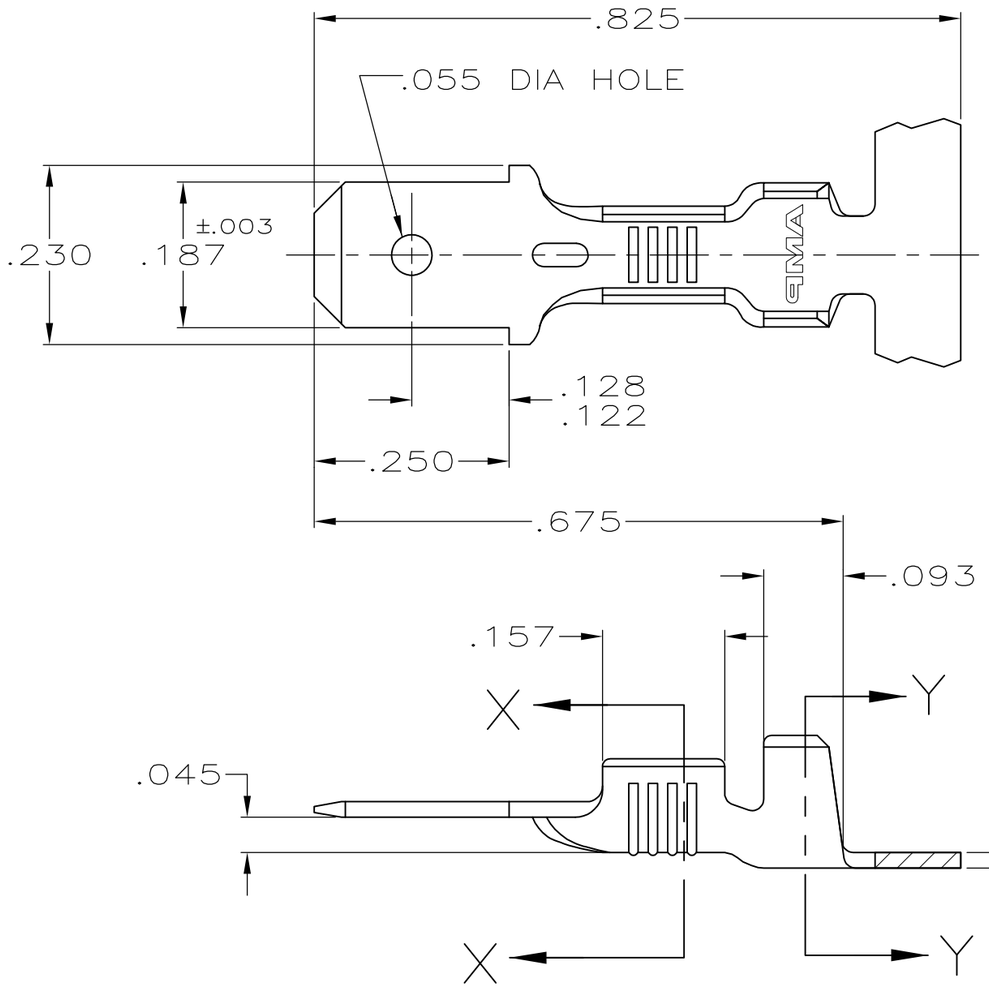

1 CONTINUOUS STRIP ON REELS.

2 REVERSE REELING.

3 FEED TO BE .440±.003.

4 PRELIMINARY – NOT FOR PRODUCTION.

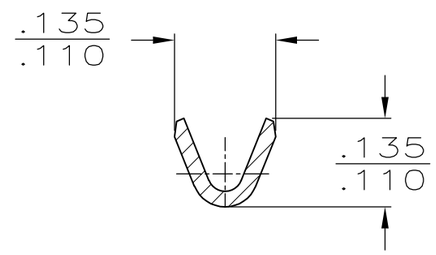

SECTION X–X

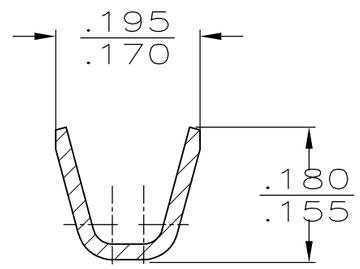

SECTION Y–Y

	FINISH / MATERIAL	INSULATION RANGE	WIRE SIZE	PART NO
	.000150 MIN SILVER/ BRASS	.080–.120 DIA	22–18 AWG	4 42490–6 2
	.000150 MIN NICKEL/ STEEL			4 42490–5
	–			2 42490–4
	TIN / BRASS			2 42490–3
OBSOLETE	~~TIN / BRASS~~			~~42490–2~~
OBSOLETE	–			~~42490–1~~

THIS DRAWING IS A CONTROLLED DOCUMENT.

DIMENSIONS: INCHES

TOLERANCES UNLESS OTHERWISE SPECIFIED:

0 PLC	± –
1 PLC	± –
2 PLC	± –
3 PLC	± .015
4 PLC	± –
ANGLES	± –

MATERIAL: SEE TABLE

FINISH: SEE TABLE

DWN	JR RUTH	1/31/91
CHK	MS FEHER	1/31/91
APVD	C MEYERS	1/31/91
PRODUCT SPEC	–	
APPLICATION SPEC	–	
WEIGHT	–	

TE Connectivity

NAME: TAB, FASTON, .187 SERIES

SIZE	CAGE CODE	DRAWING NO	RESTRICTED TO
A3	00779	C-42490	–

CUSTOMER DRAWING

SCALE 5:1 | SHEET 1 OF 1 | REV M