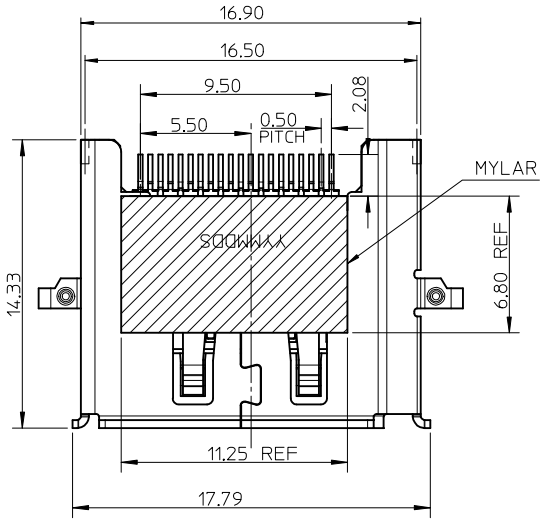

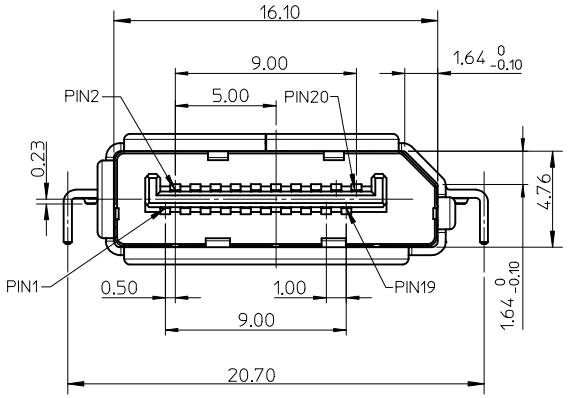

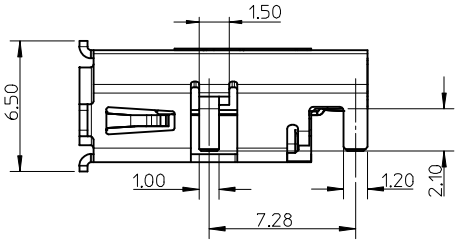

NOTES:

1. MATERIAL:
   - HOUSING: HGIH TEMPERATURE THERMOPLASTIC, BLACK, UL94V-0.
   - TERMINAL: COPPER ALLOY.
   - SHELL: COPPER ALLOY.
2. PLATING:
   - TERMINAL: CONTACT AREA: 0.76 MICROMETER GOLD PLATING,
     - A3 SOLDER TAIL: 1~3 MICROMETER MATT TIN PLATING
       - UNDER PLATE: 1 MICROMETER MIN. NICKEL PLATING OVERALL.
   - SHELL:1.27~2.54 MICROETER SOLDERABLE NICKEL PLATING OVERALL.
3. SOLDERTAIL COPLANARITY 0.10 MAX.
4. KEEPOUT AREA (NO TRACE HERE).
5. PRODUCT SPEC REFER TO PS-47272-001
6. PACKAGE SPEC REFER TO PK-47644-001

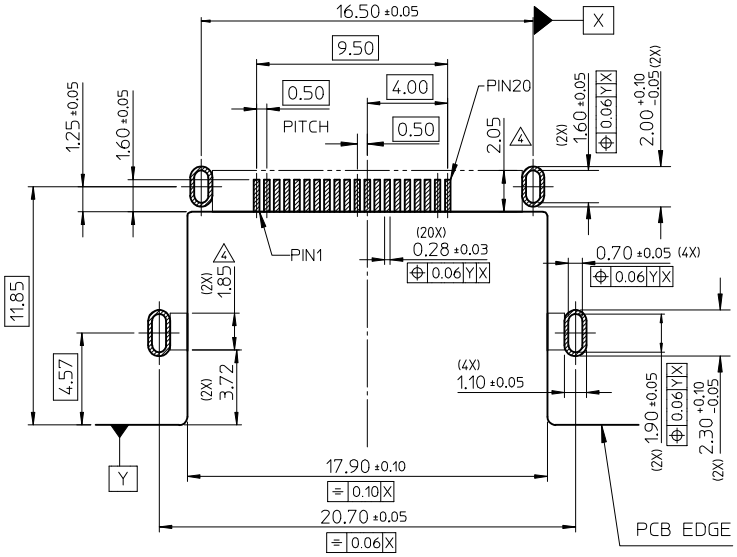

RECOMMENDED PCB LAYOUT (THICKNESS=1.2MM ± 0.05MM)

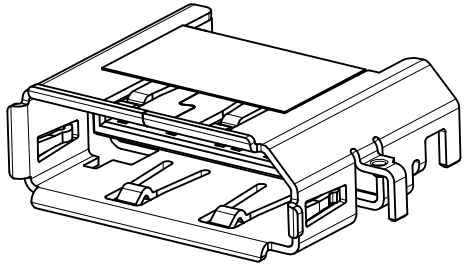

REVISED EC NO: SH2015-0046 DRWN:RZHANG 2014/07/30 CHKD:RZHANG 2014/07/30 APPR:AYIN 2014/08/13 A3	DESCRIPTION REV	QUALITY SYMBOLS E_A=0 E_C=0 E_B=0	GENERAL TOLERANCES (UNLESS SPECIFIED) mm / INCH 4 PLACES ± --- / ± --- 3 PLACES ± --- / ± --- 2 PLACES ± 0.25 / ± --- 1 PLACE ± 0.25 / ± --- ANGULAR ± 3 ° DRAFT WHERE APPLICABLE MUST REMAIN WITHIN DIMENSIONS	DIMENSION STYLE MM ONLY DRAWN BY HHE DATE 2008/08/18 CHECKED BY RZHANG DATE 2008/08/18 APPROVED BY RZHANG DATE 2010/03/26 MATERIAL NO. 476441001 SIZE A3	SCALE 1:1 DESIGN UNITS METRIC THIRD ANGLE PROJECTION TITLE 0.23MM CENTER HIGHT SINK REVERSE TYPE DISPLAYPORT HEADER ASSEMBLY molex MOLEX INCORPORATED DOCUMENT NO. SD-47644-002 SHEET NO. 1 OF 1	THIS DRAWING CONTAINS INFORMATION THAT IS PROPRIETARY TO MOLEX INCORPORATED AND SHOULD NOT BE USED WITHOUT WRITTEN PERMISSION

tb_frame_A3_P_AM_T
Rev. F 2009/06/18