MARKETING SALES DRAWING

DIMENSIONS IN INCHES - DO NOT SCALE THIS DRAWING
DIMENSIONS IN METRIC - [ ]

Electrical Testing per Tusonix standard test plans and Mil-Std-202 Test Methods.

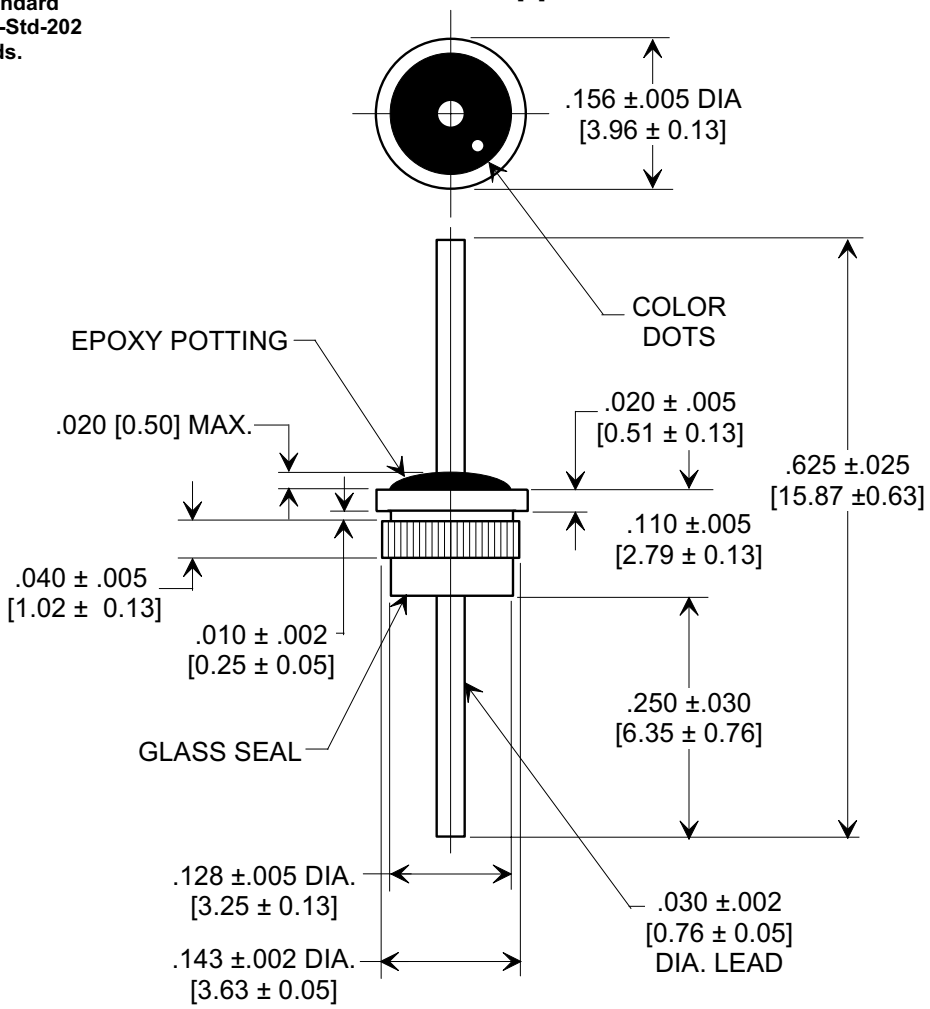

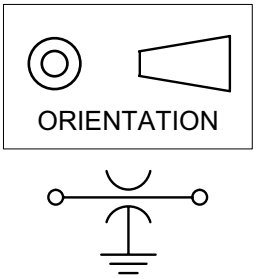

NOTES:

1. Gold plating, type III (99.9% min.), 100 microinch thickness over 200 microinch nickel underplate.
2. Epoxy sealed on opposite end from glass.
3. Max. recommended terminal soldering temperature: 260°C.
4. Recommended mounting hole: .136/.137 [3.45/3.48]. Hole must be free of insulating material. Proper installation requires firm, steady pressure until flange is fully seated.
5. Operating temperature range: -55°C to +125°C.
6. Tusonix Standard part number: 4304-011.
   Tusonix RoHS compliant part number: 4304-011 LF.
   Customer must specify Standard or RoHS part number when ordering.
7. RoHS compliant part marked with additional dark green dot for identification.

Cx (pF)	DC Working Voltage		DC Current (Amps)	Dielectric Withstanding Voltage (VDC)	Insulation Resistance Min @ 100 (VDC)	MIN. NO LOAD INSERTION LOSS (dB) @ 25° C PER MIL-STD-220					COLOR CODE
	85°C	125°C				1 MHz	10 MHz	100 MHz	1GHz	10 GHz	
50,000 GMV	50	50	5	100	10 G	15	35	45	70	----	BLUE BLUE

REVISION RECORD

	Original Release C.O.	WAS SK 7718-005 L.E. 09-05-01
0	20010829-2-15	DIM. REV'D .040 ± .005 WAS +.005 / -.000 L.E. 10-04-01
1	20010921-7-14	COLOR CODE & NOTE 5 ADDED L.E. 01-08-03
2	20030107-4-12	POTTING ABOVE SHELL REMOVED L.E. 03-07-03
3	20030304-4-13	POTTING ABOVE SHELL & DIM. .020 ADDED. S.M. 04-29-03
4	20030415-2-04	ADDED NOTES 6 & 7. S.M. 05-31-05
5	20050513-4-45	

--TOLERANCES--
Unless Otherwise Specified

DECIMAL ±

ANGLES ±

TUSONIX
TUCSON, ARIZONA

Title
PRESS-IN EMI FILTER

Drawn L.E. 08-03-01

Scale 5 X

Approved B.M. 08-03-01

A

4304-011

X-2015 Rev-0