Tous droits strictement reserves. Reproduction ou communication a des tiers interdite sous quelque forme que ce soit sans autorisation ecrite du propietaire. Propriete de c FCI. Droits de reproduction FCI.

All rights strictly reserved. Reproduction or issue to third parties in any form whatever is not permitted without written authority from the proprietor. Property of FCI. Copyright FCI.

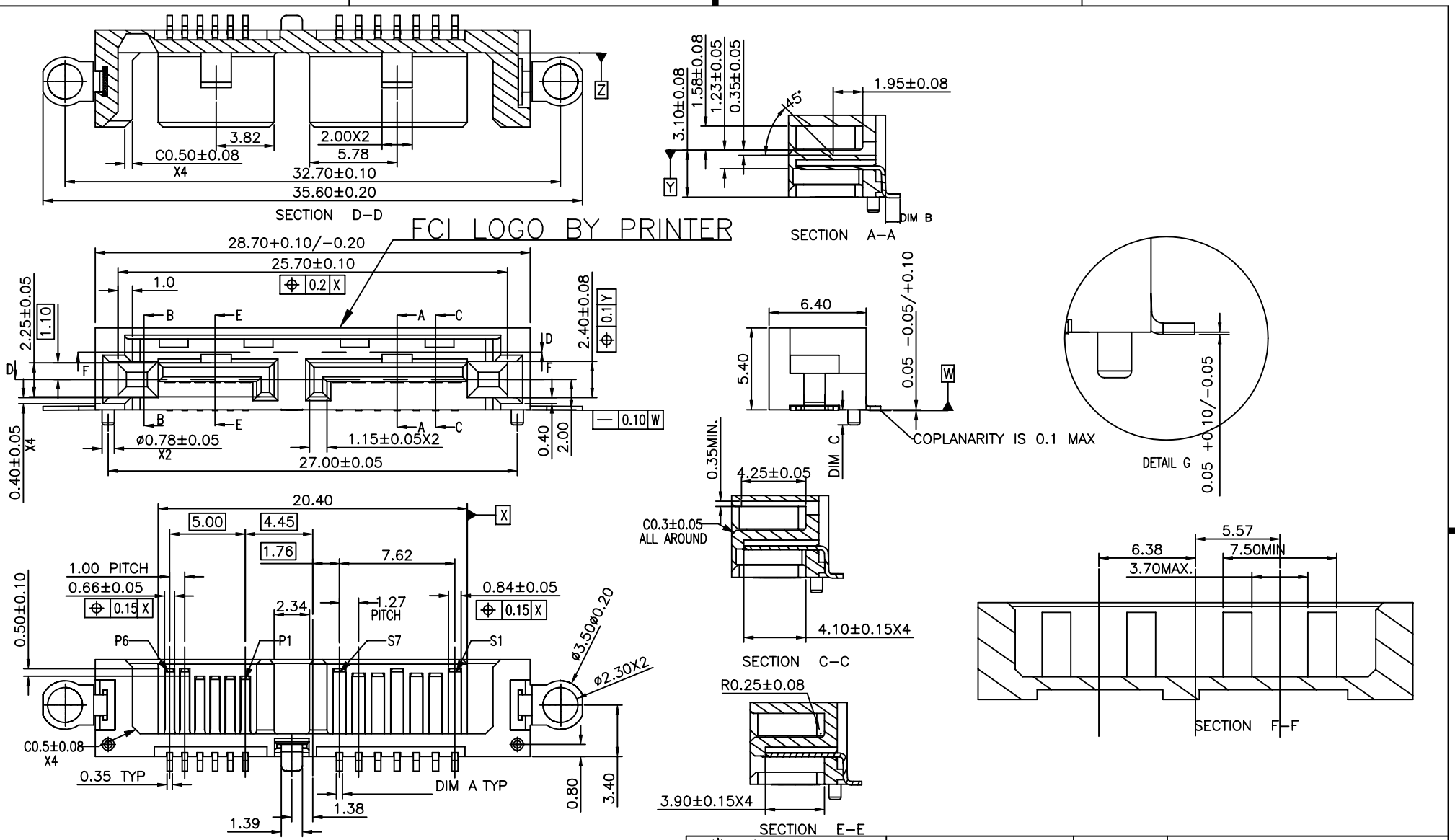

mat'l. code				tolerances unless otherwise specified				CUSTOMER COPY	FCI www.fciconnect.com
ltr	ecn no	dr	date		.X ± 0.38			projection	title SLIM SATA 7+6P PLUG SCREW R/A SMT.
A	T07–1071	S.Lin	05/15/07	linear	.XX ± 0.25				
B	T07–1123	S.Lin	08/01/07		.XXX ± 0.15				
C	T08–1003	S.Lin	01/15/08	angles	0° ±2°				
D	T08–1089	S.Lin	05/09/08	dr	Sterling Lin	05/15/07		MM	product family SATA / code TWN
				engr	Sterling Lin	05/15/07			size A4 / dwg no 10077331
				chr	STERLING LIN	05/15/07		scale NA	sheet 1 of
				appd	MINERVA WANG	05/15/07			
sheet index	revision sheet	D 1	D 2						cage code

Printed: May 15, 2008

STATUS: Released

PDM: Rev:D

ACAD

Tous droits strictement reserves. Reproduction ou communication a des tiers interdite sous quelque forme que ce soit sans autorisation ecrite du propietaire. Propriete de c FCI. Droits de reproduction FCI.

All rights strictly reserved. Reproduction or issue to third parties in any form whatever is not permitted without written authority from the proprietor. Property of FCI. Copyright FCI.

NOTES:
1. MATERIAL:
   HOUSING: HIGH TEMPERATURE THERMOPLASTIC UL 94V-0
   COLOR: BLACK
   CONTACT: BRASS
   SOLDER TAB: BRASS

2. FINISH:
   CONTACT: GOLD PLATING ON CONTACT AREA
   100m" MIN. MATT TIN PLATING ON SOLDERTAILS
   50m" MIN. NICKEL UNDERPLATING OVER ALL
   SOLDER TAB: 100m" MIN. MATT TIN PLATING ON SOLDERTAILS
   50m" MIN. NICKEL UNDERPLATING OVER ALL
3. THE HOUSING WILL WITHSTAND EXPOSURE TO 260C PEAK TEMP. FOR 10 SEC IN A CONVECTION, INFRA-RED OR VAPOR PHASE REFLOW OVEN
4. PRODUCT SPEC: GS-12-450
   PACKING SPEC: GS-14-1169
5. PRODUCT NUMBERING:
   10077331 - X X 507 XX LF - LEAD FREE

(FOR CUSTOMER T ONLY)
LF :T&R PACKING,DIM A=0.4MM,DIM B=1.0MM,DIM C=0.7MM
BLANK: OTHER CUSTOMERS

0: T&R PACKING, DIM A= 0.35MM, DIM B=0.7MM,DIM C=1.0MM
1: T&R PACKING, DIM A= 0.40MM, DIM B=1.0MM,DIM C=1.0MM

0: G/F AT CONTACT AREA
1: 5u" GOLD AT CONTACT AREA
3: 30u" GOLD AT CONTACT AREA

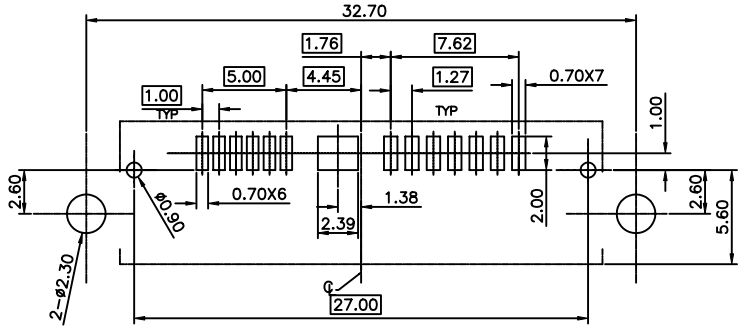

RECOMMEND PCB LAYOUT
PCB TOLERANCE:±0.05

mat'l. code				tolerances unless otherwise specified				CUSTOMER COPY	FCI www.fciconnect.com	
ltr	ecn no	dr	date			.X ± 0.38				
A	T07-1071	S.Lin	05/15/07	linear		.XX ± 0.25		projection	title SLIM SATA 7+6P PLUG SCREW R/A SMT.	
B	T07-1123	S.Lin	08/01/07			.XXX ± 0.15				
C	T08-1003	S.Lin	01/15/08	angles		0° ±2°				
D	T08-1089	S.Lin	05/09/08	dr	Sterling Lin		05/15/07	MM	product family SATA	code TWN
				engr	Sterling Lin		05/15/07		size A4 dwg no 10077331	sheet 2 of
				chr	STERLING LIN		05/15/07	scale NA		
				appd	MINERVA WANG		05/15/07			
sheet index	revision sheet	D 1	D 2						cage code	

ACAD