RECOMMENDED P.C. BOARD LAYOUT FOR TMM (QUAD)

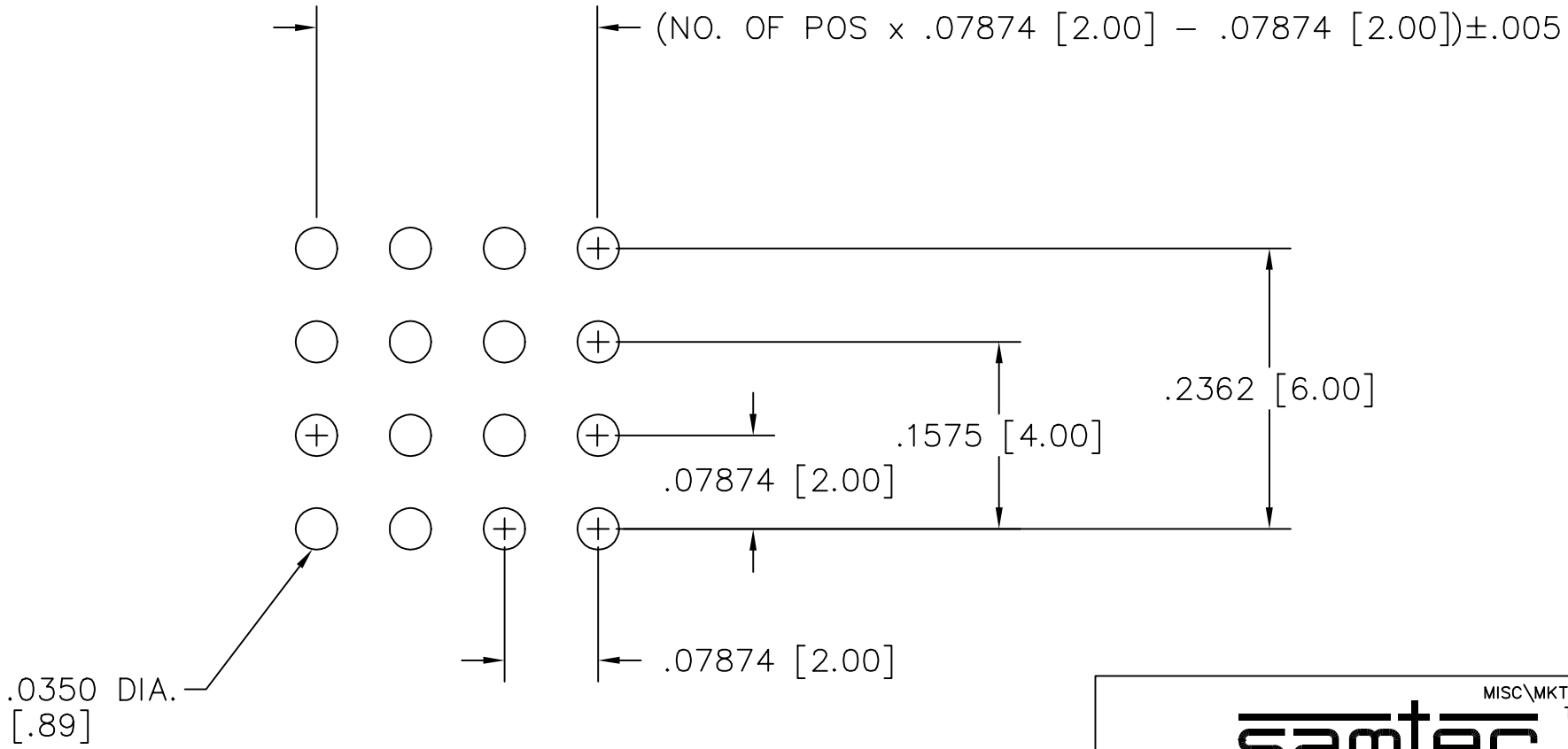

PLOT SCALE: 1 = .1

MISC\MKTG\FOOTPRNT
TMM–Q

samtec

810 PROGRESS BLVD. NEW ALBANY, INDIANA 47150
PHONE (812) 944–6733 P.O. BOX 1147