PART NO.	ENGINEERING NO.	FINISHED LENGTH	CABLE CODE	CABLE COLOR	CABLE TYPE
1300611119	304T06K09M005A3	.5M (19.7")	K09	YELLOW	STATIC
1300611063	304T06K26M020A3	2.0M (78.7")	K26	BLACK	STATIC
1300611064	304T06K26M040A3	4.0M (157.5")	K26	BLACK	STATIC
1300611065	304T06K26M060A3	6.0M (236.2")	K26	BLACK	STATIC
1300610297	304T06K36M020A3	2.0M (78.7")	K36	BLACK	FLEX

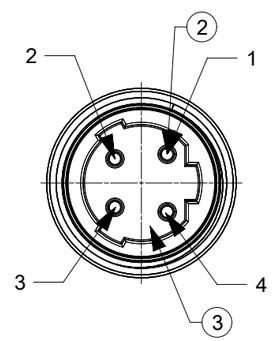

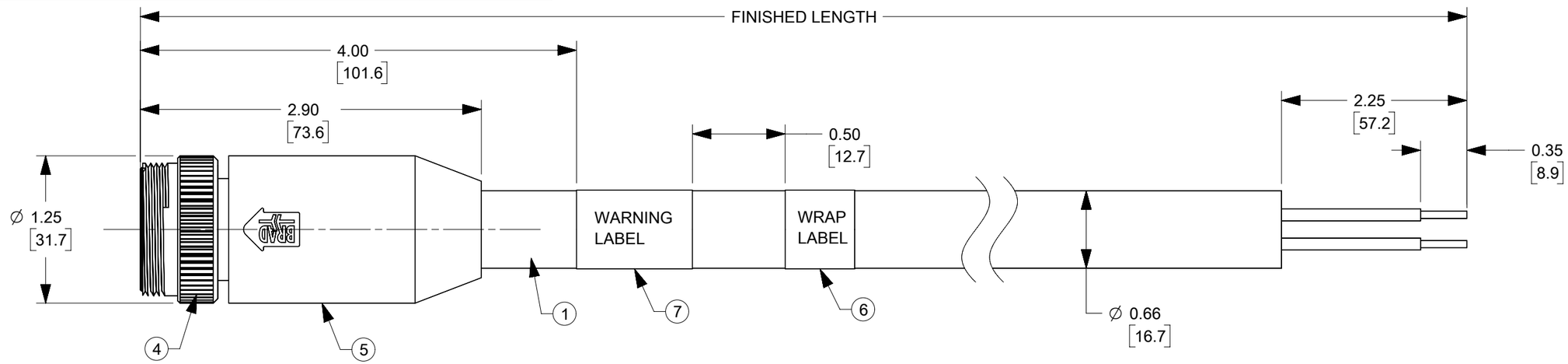

NOTE:
1) MATERIAL: SEE TABLE
2) FINISHES: SEE TABLE
3) FLAG LABEL IS MARKED WITH PART No., DATE CODE, VOLTAGE AND AMPERAGE
4) ELECTRICAL DATA
   POLE: 4
   MAX. VOLTAGE: IEC60664 500V
   UL2237 600V
   MAX. CURRENT: 25A
5) ENVIRONMENTAL
   PROTECTION: IP67 (WHEN MATED)
   TEMPERATURE RATING: -20C TO 90C
6) PACKAGING:
   ASSEMBLIES ARE BAGGED SEPARATELY IN POLY BAGS WITH BAR CODE LABEL ATTACHED TO OUTSIDE OF BAG
7) ASSEMBLY IS RoHS COMPLIANT
8) UL LISTED FILE
   CABLE TYPE K09/K26 - E258922
   CABLE TYPE K36 - PENDING
9) MATING THREAD: 1 1/8-16 UN
10) DIMENSIONS SHOWN ARE FOR REFERENCE UNLESS TOLERANCED OR NOTED OTHERWISE

WIRING DIAGRAM

1	BLACK#1
2	BLACK#2
3	BLACK#3
4	GREEN/YELLOW

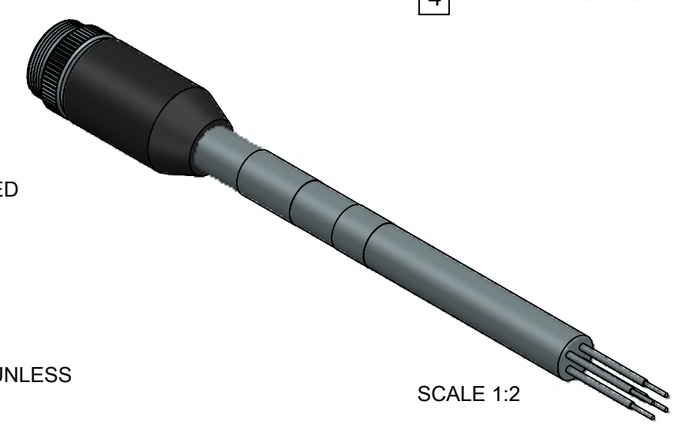

SCALE 1:2

PART NUMBER MATRIX

304T06K26M005A3

CABLE TYPE
12/4C AWG TYPE
SHIELDED

FINISH LENGTH
M005 = 0.5 METER
M010 = 1 METER
M100 = 10 METER

ITEM	DESCRIPTION	MATERIAL	FINISH
7	WARNING LABEL	VINYL	MULTI COLOR
6	WRAP LABEL	VINYL	YELLOW
5	OVER MOLD	TPE	GRAY
4	MALE COUPLING NUT	BRASS	NICKEL PLATED
3	4P MALE INSERT	TPE	BLACK
2	PIN CONTACT	BRASS	GOLD PLATED
1	12/4C AWG SHIELDED	TPE JACKET, XLPE INSUL	SEE CABLE CHART

CABLE LENGTH TOLERANCES
<.3M [1FT]: +19mm-0 [+.75in-0]
.3 - .9M [1 - 3FT]: +44.5mm-0 [+1.75in-0]
.9 - 1.8M [3 - 6FT]: +55.6mm-0 [+2.19in-0]
1.8 - 3.7M [6 - 12FT: +88.9mm-0 [+3.50in-0]
3.7 - 7.3M [12 - 24FT]: +165.1mm-0 [+6.50in-0]
7.3-14.6M [24 - 48FT]: +317.5mm-0 [+12.50in-0]
14.6 - 30.5M [48-100FT]: +622.3mm-0 [+24.50in-0]
OVER 30M [100FT] +2% OF FINISHED LENGTH

DOCUMENT STATUS	P1	RELEASE DATE	2021/07/16 22:41:32

THIS DRAWING CONTAINS INFORMATION THAT IS PROPRIETARY TO MOLEX ELECTRONIC TECHNOLOGIES, LLC AND SHOULD NOT BE USED WITHOUT WRITTEN PERMISSION

FUNCTIONAL SYMBOLS: EA = 0, EC = 0, EP = 0
DIVISIONAL SYMBOLS

DIMENSION UNITS: INCH
SCALE: 1:1
GENERAL TOLERANCES (UNLESS SPECIFIED)
ANGULAR TOL ± °
4 PLACES ±
3 PLACES ±
2 PLACES ±
1 PLACE ±
0 PLACES ±
DRAFT WHERE APPLICABLE MUST REMAIN WITHIN DIMENSIONS

CURRENT REV DESC: ADDED PART NUMBER TO PN TABLE, UPDATED NOTES

EC NO: 656902
DRWN: ALEON01 2021/02/18
CHK'D: MZIELINSKI 2021/06/25
APPR: BWOODMAN 2021/07/16

INITIAL REVISION:
DRWN: TWOLDEGEBRIE 2016/09/29
APPR: BWOODMAN 2016/11/14

THIRD ANGLE PROJECTION | DRAWING: B-SIZE | SERIES: 130061

molex

MINI CHANGE BRAD POWER(C-SIZE)
4-POLE MALE TRI KEY ST 360S 12/4C AWG VFD
SHIELDED CABLE

PRODUCT CUSTOMER DRAWING

DOCUMENT NUMBER	DOC TYPE	DOC PART	REVISION
1300610269	PSD	000	C

MATERIAL NUMBER | CUSTOMER | SHEET NUMBER 1 OF 1

FORMAT: master-tb-prod-B
REVISION: J
DATE: 2020/01/14