THIS DRAWING IS UNPUBLISHED. RELEASED FOR PUBLICATION -
© COPYRIGHT - - ALL RIGHTS RESERVED.

LOC	DIST
-	-

REVISIONS

P	LTR	DESCRIPTION	DATE	DWN	APVD
	E	REV PER ECO 14-014390	9-23-14	CT	DH

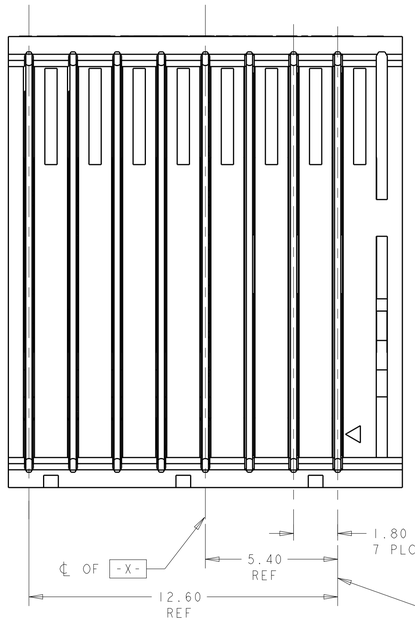

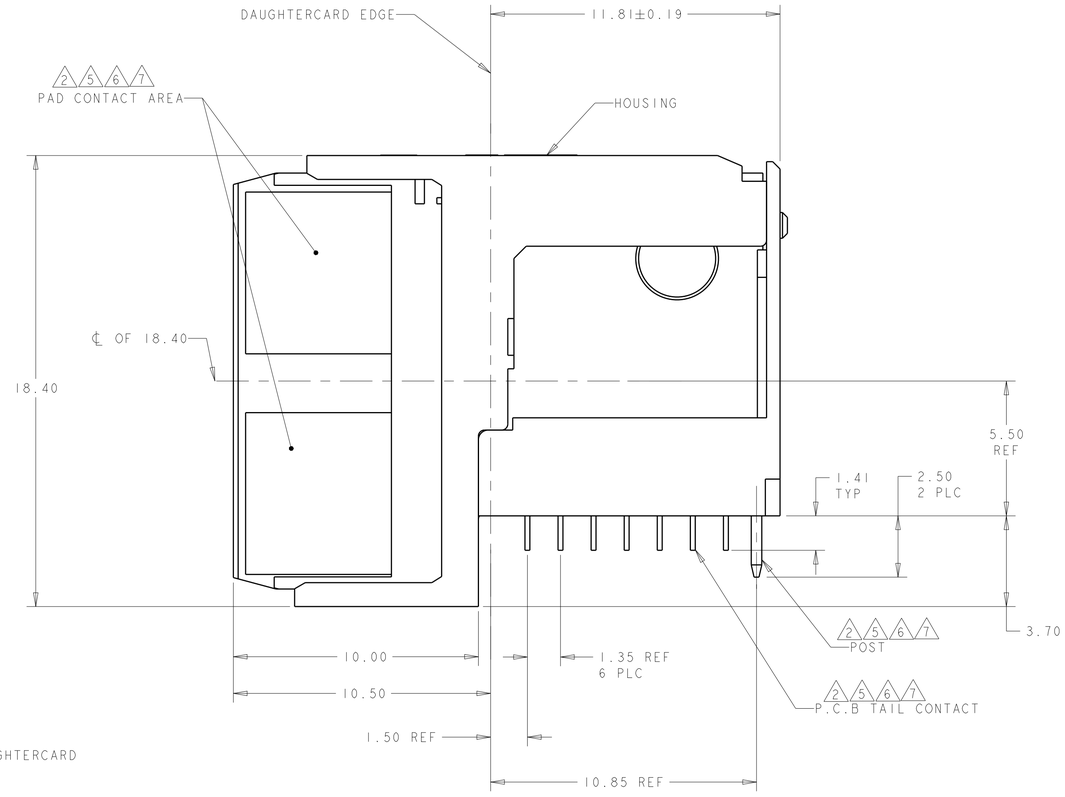

1. HOUSING: LCP, UL94V0, COLOR: BLACK.
   CONTACT: PHOSPHOR BRONZE.
   POST: BRASS WIRE
2. CONTACT: 0.76µm MIN GOLD IN PAD CONTACT AREA, 1.27µm MIN TIN-LEAD ON PCB TAIL OVER 1.27µm MIN. NICKEL OVER ALL.
   POST: 1.27µm MIN NICKEL PLATED.
3. PLATE THROUGH HOLE PER TE SPEC. 114-13056 FIGURE 4.
4. SEE TABLE 1 FOR INTERCONNECTIONS TO BACKPLANE CONNECTOR.
5. CONTACT: 0.76µm MIN GOLD IN PAD CONTACT AREA, 1.27µm MIN TIN ON PCB TAIL OVER 1.27µm MIN. NICKEL OVER ALL.
   POST: 1.27µm MIN NICKEL PLATED.
6. CONTACT: 1.27µm MIN GOLD IN PAD CONTACT AREA, 1.27µm MIN TIN-LEAD ON PCB TAIL OVER 1.27µm MIN. NICKEL OVER ALL.
   POST: 1.27µm MIN NICKEL PLATED.
7. CONTACT: 1.27µm MIN GOLD IN PAD CONTACT AREA, 1.27µm MIN TIN ON PCB TAIL OVER 1.27µm MIN. NICKEL OVER ALL.
   POST: 1.27µm MIN NICKEL PLATED.

TABLE 1
INTERCONNECTIONS WITH BACKPLANE CONNECTOR 1410186

TYPICAL INTERCONNECTIONS FOR COLUMN (WAFER): 8		
CONTACT USAGE	DAUGHTERCARD CONNECTOR PIN	BACKPLANE CONNECTOR PIN
SIGNAL PAIR	bx	cx
	cx	dx
SIGNAL PAIR	ex	gx
	fx	hx
GROUNDS	ax, dx, gx, (ALL COMMONED)	ax, bx, ex, fx, ix

TYPICAL INTERCONNECTIONS FOR COLUMN (WAFER): 7		
CONTACT USAGE	DAUGHTERCARD CONNECTOR PIN	BACKPLANE CONNECTOR PIN
SIGNAL PAIR	ax	ax
	bx	bx
SIGNAL PAIR	dx	ex
	ex	fx
SIGNAL	gx	ix
GROUNDS	cx, fx (ALL COMMONED)	cx, dx, gx, hx

TYPICAL INTERCONNECTIONS FOR EACH COLUMN (WAFER): 4,5,6		
CONTACT USAGE	DAUGHTERCARD CONNECTOR PIN	BACKPLANE CONNECTOR PIN
SIGNAL	ax	bx
SIGNAL	bx	cx
SIGNAL	dx	ex
SIGNAL	fx	gx
SIGNAL	gx	hx
GROUNDS	cx, ex, (ALL COMMONED)	ax, dx, fx, ix

TYPICAL INTERCONNECTIONS FOR EACH COLUMN (WAFER): 1,2,3		
CONTACT USAGE	DAUGHTERCARD CONNECTOR PIN	BACKPLANE CONNECTOR PIN
POWER	ax, bx, cx	ax, bx, cx, dx
POWER	ex, fx, gx	fx, gx, hx, ix
NOT CONNECTED	dx	ex

NOTE: "x" DESIGNATES THE COLUMN NUMBER

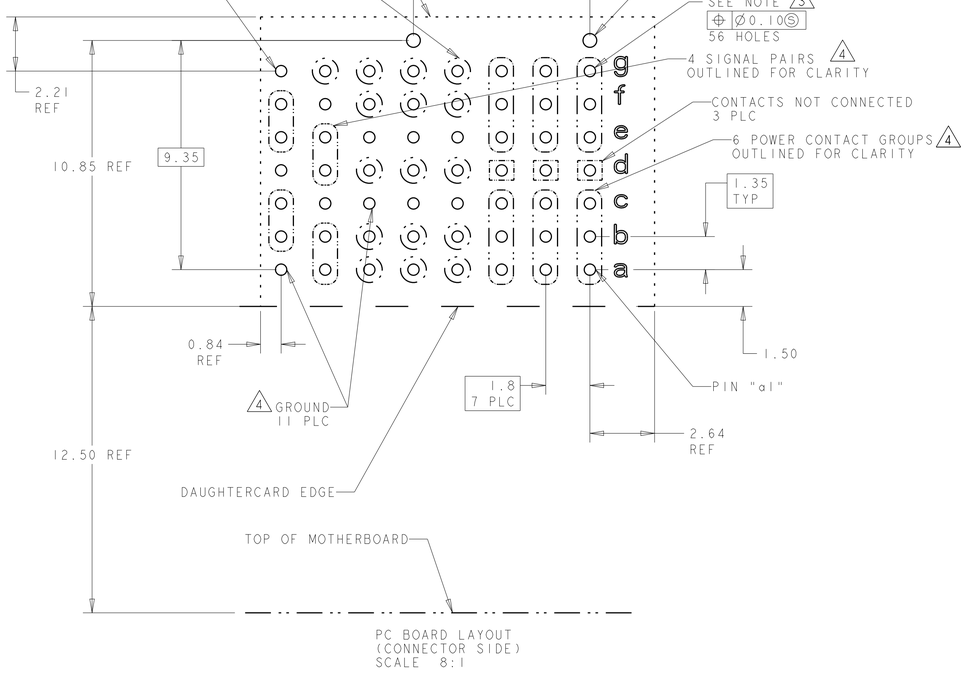

PC BOARD LAYOUT
(CONNECTOR SIDE)
SCALE 8:1

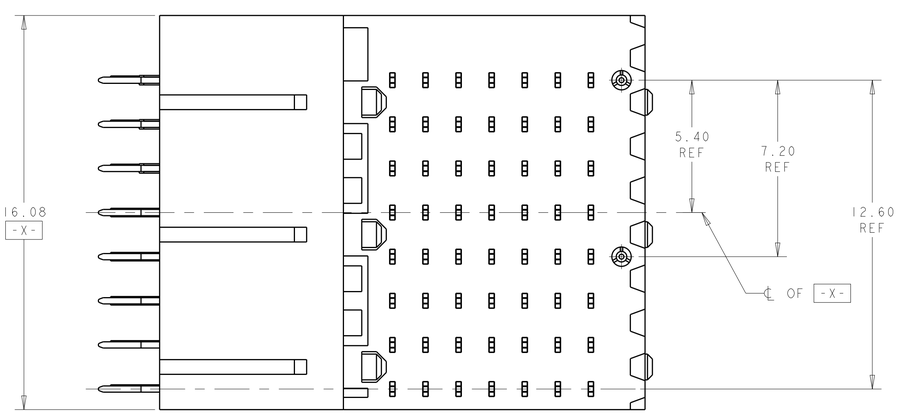

7	1410189-4
6	1410189-3
5	1410189-2
2	1410189-1
PLATING	PART NO

THIS DRAWING IS A CONTROLLED DOCUMENT.

DIMENSIONS: mm

TOLERANCES UNLESS OTHERWISE SPECIFIED:
0 PLC ±-
1 PLC ±0.5
2 PLC ±0.13
3 PLC ±-
4 PLC ±-
ANGLES ±1°0'

MATERIAL - 1

FINISH - SEE TABLE

DWN L SIPE 13FEB2004
CHK J CONSOLI 13FEB2004
APVD G GRIFFITH 14MAR2006
PRODUCT SPEC 108-2072
APPLICATION SPEC 114-13056
WEIGHT -

TE Connectivity

NAME RIGHT-ANGLE PLUG ASSEMBLY, 7 ROW HALF LEFT END, 20.3mm, MultiGig RT2, DAUGHTERCARD CONNECTOR, VITA 46

SIZE A1 CAGE CODE 00779 DRAWING NO C-1410189 RESTRICTED TO -

CUSTOMER DRAWING SCALE 8:1 SHEET 1 OF 1 REV E

4805 (3/11)