| BS,C ,202788,094 | D |
|---|---|

| GEN. ST. | 01 | 02 | 03 | 04 | 05 | 06 | 07 | 08 | 0D | 50 | 60 | 70 | 80 | 90 |
|---|---|---|---|---|---|---|---|---|---|---|---|---|---|---|
| INT. ST. | 10 11 12 13 14 | 18 20 | 31 32 | 33 34 | 38 39 | 40 42 | 43 44 | 45 46 | 48 56 | 70 72 | 73 75 | 76 81 | 82 83 | 84 88 |

| REV. | DATE | DESCRIPTION | BY | C'K'D' |
|---|---|---|---|---|
| A | 2001-09-14 | CONVERSION REVISION 01 | KN | |
| B | 2002-05-28 | EC B20086 | MF | |
| C | 2005-11-14 | 105-0231 | ALEX B | BKP |
| D | 2006-08-10 | 106-0145 | ALEX B | BKP |

## LOADING PATTERN MATING SIDE

| | 01 | 02 | 03 | 04 | 05 | 06 | 07 | 08 | 09 | 10 |
|---|---|---|---|---|---|---|---|---|---|---|
| f | 6 | 6 | 6 | 6 | 6 | 6 | 6 | 6 | 6 | 6 |
| e | 4 | 4 | 4 | 4 | 4 | 4 | 4 | 4 | 4 | 4 |
| d | 4 | 4 | 4 | 4 | 4 | 4 | 4 | 4 | 6 | 4 |
| c | 4 | 4 | 4 | 4 | 4 | 4 | 4 | 4 | 4 | 4 |
| b | 4 | 4 | 4 | 4 | 4 | 4 | 4 | 4 | 4 | 4 |
| a | 4 | 4 | 4 | 4 | 4 | 4 | 4 | 4 | 4 | 4 |
| z | 6 | 6 | 6 | 6 | 6 | 6 | 6 | 6 | 6 | 6 |
| POS | 01 | | | | 05 | | | | | 10 |

## LOADED CONNECTOR ASSEMBLY
(FOR EXAMPLE)

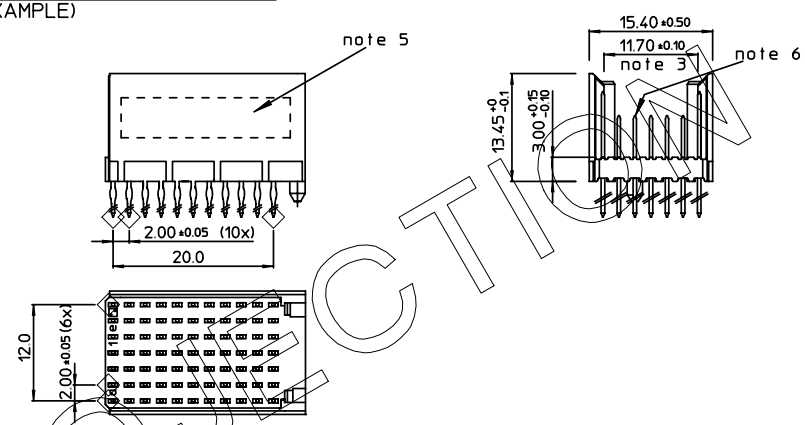


## CONTACT OVERVIEW

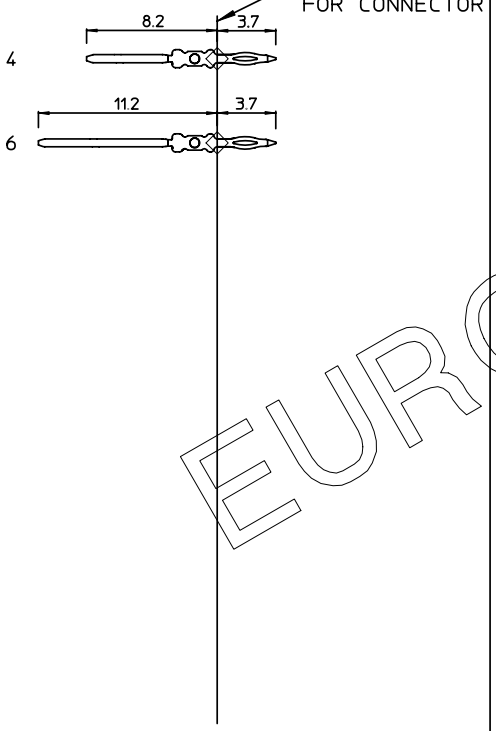


## LAY-OUT P.C.B.-HOLE

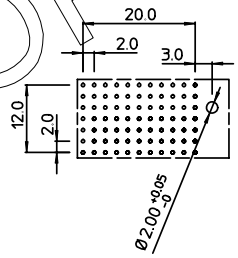


HM2P09PDN2Y1 - -

LEAD FREE INDICATOR : LF = LEAD FREE
(DIGIT 15 & 16)

PLATING CODE (DIGIT 13 AND 14)
(REF DWG No. BS,C ,201844,003)

NOTES:

1. THIS PRODUCT IS CSA APPROVED.
2. THIS PRODUCT IS UL RECOGNIZED.
3. MEASURED AT THE BOTTOM.
4. MATERIAL CONTACT: PHOSPHORBRONZE
   HOUSING: CREAM WHITE GLASSFILLED POLYESTER UL-94V0
5. CONNECTOR PRINTED WITH P/N AND DATE CODE.
6. FOR ACTUAL CONTACT LOADINGS, SEE LOADING PATTERN MATING SIDE.
7. SHAPE OF CONNECTOR HOUSING CAN ALTER DEPENDING ON PRODUCTION LOCATION.
8. THE PRODUCT (LF) MEETS EUROPEAN UNION DIRECTIVES AND OTHER COUNTRY REGULATIONS AS DESCRIBED IN GS-22-008
9. FOR RECOMMENDED PTH DIMENSIONS REFER DRAWING : BS,A ,201572,001

EUROPEAN PROJECTION

| | APPR. | DATE | SIGN. |
|---|---|---|---|
| 1DEC ±0,2 | DRAFT | 2001-03-12 | M.Fret |
| 2DEC ±0,1 | CHECKED | | |
| ANGLES ±1° | PROD. MGR. | | |
| | PR.ENG.MGR. | | |
| | PR.MGT.MGR. | | |

WE RESERVE THE RIGHT TO CHANGE DIMENSIONS OR REQUIREMENTS WITHOUT PRIOR NOTICE.

ALL DIMENSIONS IN MM

REFERENCES

MPACS 5+2R STR HDR SG PF CONN TYPE C

CAT. No. HM2P09PDN2Y1----

FCI www.fciconnect.com

SCALE

BS,C ,202788,094 — DRAWING No.

D — REVISION

THIS IS OUR EXCLUSIVE PROPERTY. IT IS NOT TO BE COPIED, REPRINTED OR DISCLOSED TO A THIRD PARTY, NOR USED FOR MANUFACTURING WITHOUT OUR WRITTEN CONSENT, AND HAS TO BE RETURNED TO US IN CASE OF NO USAGE

DIT IS ONZE EIGENDOM EN MAG NOCH NAGEMAAKT, HERDRUKT, OVERGEMAAKT AAN DERDEN, NOCH VOOR FABRIKATIE GEBRUIKT WORDEN, ZONDER ONZE SCHRIFTELIJKE TOELATING. BIJ NIET GEBRUIK IS TERUGZENDING VERPLICHT.

PDM: Rev:D STATUS: Released Printed: Dec 03, 2007

CUSTOMER DRAWING

ME10