THIS DRAWING IS UNPUBLISHED. RELEASED FOR PUBLICATION -.- .
© COPYRIGHT - BY TE CONNECTIVITY CORPORATION. ALL RIGHTS RESERVED.

LOC	DIST
AA	22

REVISIONS

P	LTR	DESCRIPTION	DATE	DWN	APVD
	B	REV PER ECO-08-031921	12DEC2008	VL	LR
	C	ECO-11-013433	30MAY2011	EL	LR

MECHANICAL:

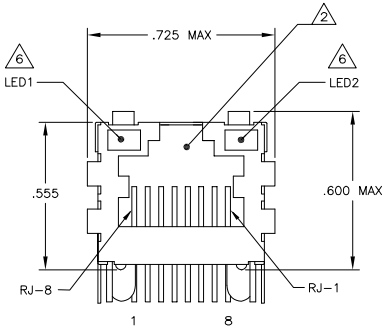

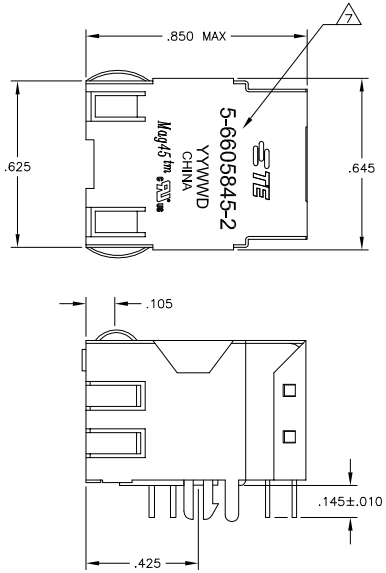

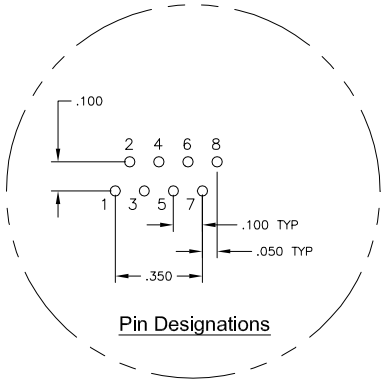

Pin Designations

1. MATERIALS:
-HOUSING - THERMOPLASTIC PET POLYESTER FLAMMABILITY RATING UL 94V-0.
-SHIELD - .010" THICK, C26800 BRASS PREPLATED WITH 30 µINCH MIN SEMI-BRIGHT NICKEL, SOLDER TABS POST DIPPED WITH 100 µINCH MIN SAC SOLDER.
-MOD JACK CONTACTS - 0.0157" x 0.018" PHOSPHOR BRONZE, 50 µINCH MIN OVERALL NICKEL UNDERPLATE, WITH SELECT 50 µINCH MIN HARD GOLD FINISH PLATE. SOLDERTAILS WITH 100 µINCH MIN MATTE TIN AND/OR SAC SOLDER DIP.
-LIGHT EMITTING DIODE(LED) - DIFFUSED EPOXY LENS, .020" x .020" CARBON STEEL WIREFRAME LEADS PRE-PLATED WITH 80 µINCH SILVER OVER 40 µINCH NICKEL UNDERPLATE OVER 40 µINCH COPPER UNDERPLATE, POST-PLATED WITH 100µINCH MIN MATTE TIN AND/OR SAC SOLDER DIP OR PURE TIN SOLDER DIP.

2. RJ45 JACK CAVITY CONFORMS TO FCC RULES AND REGULATIONS PART 68, SUB PART F.

3. MAGNETICS
-IMPEDANCE: 100 OHMS
-TURNS RATIO (CHIP:CABLE): TX = 1:1, RX = 1:1
-OPEN CIRCUIT INDUCTANCE (OCL): 350 µH MIN @100kHz, 0.1VRMS, 8mADC BIAS FROM -40°C TO +85°C, TX AND RX
-PERFORMANCE @ 25°C:
INSERTION LOSS (IL): 1.1dB MAX FROM 0.5MHz TO 100MHz
RETURN LOSS (RL): 18dB MIN FROM 0.5MHZ TO 30MHz
18-20LOG(f/30)dB MIN FROM 30.1MHz TO 60MHz
12dB MIN FROM 60.1MHz TO 80MHz
CROSSTALK ATTENUATION: 35dB MIN FROM 0.5MHz TO 40MHz
33-20*LOG(f/50)dB MIN FROM 40.1MHz TO 100MHz
COMMON MODE REJECTION RATIO (CMRR): 30dB MIN FROM 0.5MHz TO 100MHz
-ISOLATION VOLTAGE:2250VDC (MAX) FOR 60 SECONDS WITH A RISE TIME OF 500V/SEC.

4. OPERATING TEMPERATURE: FROM -40°C TO +85°C INDUSTRIAL TEMPERATURE RATED.

5. INDICATED CONNECTIONS ARE FOR HUB CONFIGURATION. THE MAGNETICS ARE ASYMMETRICAL, AND ARE NOT AUTO-MDI/MDIX CAPABLE.

6. LEDS WITH BUILT-IN RESISTOR
LEDS ARE DRIVEN WITH 5V VOLTAGE AND THE MAX OPERATING CURRENT IS 20mA.
LED COLOR: DOMINANT WAVELENGTH (λD): GREEN 568 nm TYP @ VF=5V
FORWARD CURRENT (IF): GREEN 12mA TYP @ VF=5V
DOMINANT WAVELENGTH (λD): YELLOW 588 nm TYP @ VF=5V
FORWARD CURRENT (IF): YELLOW 13mA TYP @ VF=5V

7. TE CONNECTIVITY LOGO, PART NUMBER, DATE CODE, COUNTRY OF ORIGIN AND AGENCY APPROVAL MARKING IN APPROXIMATE LOCATION SHOWN.

8. THE PART IS RECOMMENDED FOR WAVE SOLDERING PROCESS, PREHEAT TEMPERATURE IS 120°C TO 160°C, 120 SECONDS TO 180 SECONDS, PEAK WAVE SOLDERING TEMPERATURE IS 260°C MAX, 10 SECONDS MAX.

ELECTRICAL:

754ETP8 SERIES MAGNETIC CIRCUIT 3 5

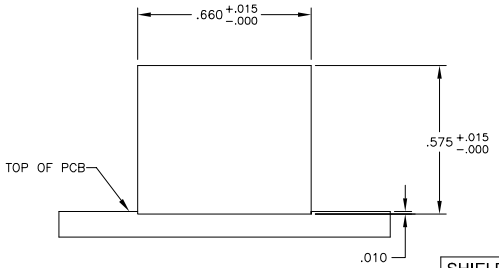

Suggested Panel Cutout

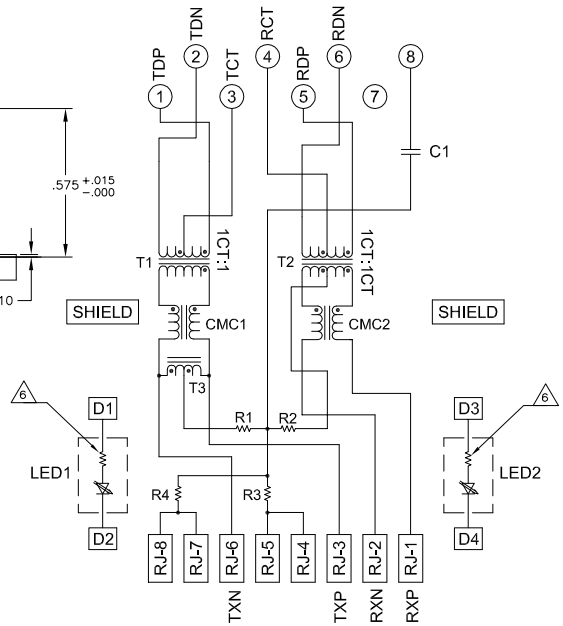

C1= 1000pF, 2kV DECOUPLING CAPACITOR
R1 - R4 = 75 OHMS, 1/16 W RESISTORS

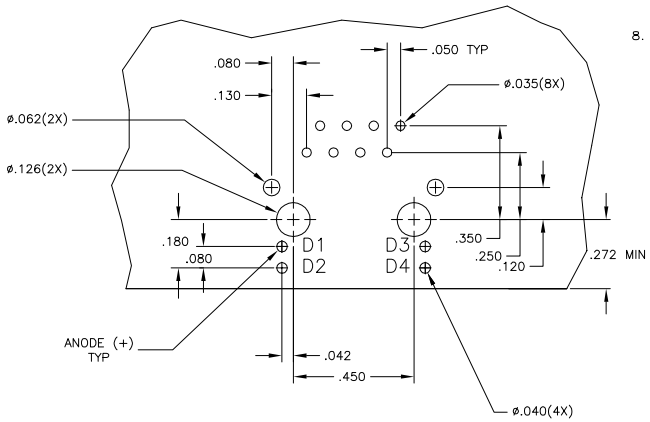

Suggested PCB Layout
(Component Side)

YELLOW	GREEN	5-6605845-2
LED1 6	LED2 6	PART NUMBER

THIS DRAWING IS A CONTROLLED DOCUMENT.

DIMENSIONS: INCHES

TOLERANCES UNLESS OTHERWISE SPECIFIED:
0 PLC ± -
1 PLC ± -
2 PLC ± .010
3 PLC ± .005
4 PLC ± -
ANGLES ± -
FINISH 1

MATERIAL 1

DWN L. VARELA 07MAR2005
CHK D. FAROLE 07MAR2005
APVD D. FAROLE 07MAR2005
PRODUCT SPEC 108-2100
APPLICATION SPEC —
WEIGHT —

TE Connectivity

NAME: 1X1 MAG45(TM) MODULAR JACK, 7H2ET INDUSTRIAL TEMP SCHEMATIC, 754ETP8 CIRCUIT, SHIELDED, DECOUPLING CAPACITOR, RESISTOR LEDS

SIZE	CAGE CODE	DRAWING NO	RESTRICTED TO
A1	00779	C-6605845	—

CUSTOMER DRAWING | SCALE NTS | SHEET 1 OF 1 | REV C